This is a digital copy of a book that was preserved for generations on library shelves before it was carefully scanned by Google as part of a project to make the world's books discoverable online.

It has survived long enough for the copyright to expire and the book to enter the public domain. A public domain book is one that was never subject to copyright or whose legal copyright term has expired. Whether a book is in the public domain may vary country to country. Public domain books are our gateways to the past, representing a wealth of history, culture and knowledge that's often difficult to discover.

Marks, notations and other marginalia present in the original volume will appear in this file - a reminder of this book's long journey from the publisher to a library and finally to you.

Usage guidelines

Google is proud to partner with libraries to digitize public domain materials and make them widely accessible. Public domain books belong to the public and we are merely their custodians. Nevertheless, this work is expensive, so in order to keep providing this resource, we have taken steps to prevent abuse by commercial parties, including placing technical restrictions on automated querying.

We also ask that you:

+ *Make non-commercial use of the files* We designed Google Book Search for use by individuals, and we request that you use these files for personal, non-commercial purposes.
+ *Refrain from automated querying* Do not send automated queries of any sort to Google's system: If you are conducting research on machine translation, optical character recognition or other areas where access to a large amount of text is helpful, please contact us. We encourage the use of public domain materials for these purposes and may be able to help.
+ *Maintain attribution* The Google "watermark" you see on each file is essential for informing people about this project and helping them find additional materials through Google Book Search. Please do not remove it.
+ *Keep it legal* Whatever your use, remember that you are responsible for ensuring that what you are doing is legal. Do not assume that just because we believe a book is in the public domain for users in the United States, that the work is also in the public domain for users in other countries. Whether a book is still in copyright varies from country to country, and we can't offer guidance on whether any specific use of any specific book is allowed. Please do not assume that a book's appearance in Google Book Search means it can be used in any manner anywhere in the world. Copyright infringement liability can be quite severe.

About Google Book Search

Google's mission is to organize the world's information and to make it universally accessible and useful. Google Book Search helps readers discover the world's books while helping authors and publishers reach new audiences. You can search through the full text of this book on the web at `http://books.google.com/`

Library
of the
University of Wisconsin

LOCKING

LOCKING

Being an elementary treatise on the mechanisms in interlocking lever machines by which the movements of the levers are restricted to certain predetermined ways, rendering it impossible to operate conflicting switches and signals on railways.

BY

FREDERICK C. LAVARACK

EAST ORANGE, N. J.

F. C. LAVARACK, No. 114 PARK STREET

COPYRIGHT
1907
FREDERICK C. LAVARACK

166530
SEP 11 1912
SSV
.L38

1402404

PREFACE.

The art of signaling has grown so much faster than has the literature on the subject that it is felt that any reliable textbook or reference book on this subject or a branch of it needs no apology. In compiling the following pages on "Locking," the author has attempted to treat this small, though important, part of a great subject in a way that will be helpful not only to those who approach the study of signaling as students, but to those who in the shop or on the road may have felt the need of such information as it contains. American practice only is described.

The author desires to extend his thanks to the various signal companies for their readiness in supplying him with information and to Captain Azel Ames, Jr., and to Mr. W. W. Lavarack, for their help in its compilation.

CONTENTS.

		PAGE
CHAPTER I.	INTRODUCTORY	1
CHAPTER II.	INTERLOCKING MACHINES	6
	Saxby & Farmer (vertical leadout) Style "A"	
CHAPTER III.	OTHER TYPES OF INTERLOCKING MACHINES.	30
	National	
	Johnson	
	Saxby & Farmer (horizontal lead-out).	
	Style "C"	
	Stevens	
	Dwarf	
	Dwarf Style "D"	
	Electric and Electro-Pneumatic	
CHAPTER IV.	LOCKING	34
CHAPTER V.	TESTING INTERLOCKING MACHINES	63
CHAPTER VI.	INSTALLATION AND MAINTENANCE OF LOCKING	73
CHAPTER VII.	TOWER DIAGRAM AND MANIPULATION CHARTS.	79

LIST OF ILLUSTRATIONS.

FIG. 1. Saxby & Farmer Interlocking Machine..... 8

FIG. 2. Saxby & Farmer Machine—Details of Latch Rod Foot 10

FIG. 3. Saxby & Farmer Locking 10

FIG. 4. Style "A" Interlocking Machine..... 12

FIG. 5. Style "A" Machine—Detail of Latch Block..... 13

FIG. 6. Saxby & Farmer Machine—Locking Details..... 15

FIG. 7. Universal Trunnion 17

FIG. 8. Saxby & Farmer Bar Splices..... 17

FIG. 9. Saxby & Farmer Locking..... 22

FIG. 10. Style "A" Machine—Locking Details..... 22

FIG. 11. Style "A" Machine—Locking..... 30

FIG. 12. National Interlocking Machine..... 30

FIG. 13. Johnson Interlocking Machine..... 31

FIG. 14. Saxby & Farmer Machine—Horizontal Leadout. 31

FIG. 15. Style "C" Interlocking Machine 31

FIG. 16. Stevens Interlocking Machine..... 32

FIG. 17. Dwarf Interlocking Machine..... 32

FIG. 18. Style "D" Dwarf Interlocking Machine..... 32

FIG. 19. Electric or Electro-Pneumatic Interlocking Machine 34

FIG. 20. Electric Interlocking Machine 33

FIG. 21. Electric Interlocking Machine..... 33

FIG. 22. Symbols for Interlocking Plans..... 36

FIG. 23. Interlocking Plan—Locking Sheet and Dog Charts. 44

FIG. 24. Interlocking Plan—Locking Sheet and Dog Charts. 46
FIG. 25. Interlocking Plan and Locking Sheet..... 48
FIG. 26. Interlocking Plan and Locking Sheet..... . 50
FIG. 27. Interlocking Plan—Locking Sheet and Dog Charts.. 52
FIG. 28. Interlocking Plan and Locking Sheet..... 54
FIG. 29. Interlocking Plan and Locking Sheet..... 56
FIG. 30. Interlocking Plan and Locking Sheet..... 56
FIG. 31. Interlocking Plan and Locking Sheet..... 58
FIG. 32. Interlocking Plan and Locking Sheet..... 60
FIG. 33. Interlocking Plan and Locking Sheet..... 60
FIG. 34. Interlocking Layouts and Locking Sheets..... . 62
FIG. 35. Transposition of Specials..... . 62
FIG. 36. Interlocking Plan, Locking Sheet and Dog Charts.. 68
FIG. 37. Interlocking Plan and Locking Sheet 74
FIG. 38. Location Numbers for Style "A" Machine Locking Parts 74
Fig. 39. Location Numbers for Saxby & Farmer Machine Locking Parts 75
FIG. 40. Tower Diagrams and Manipulation Charts..... 80

CHAPTER I.—INTRODUCTORY.

Railroad tracks comprise "Main Tracks," which are the principal tracks upon which trains are operated between stations, and "Side Tracks," which are those auxiliary to the main tracks and used for meeting or passing of trains or storage of cars. To enable railroad trains to move from one track to another, connections must be made between the various tracks by means of switches which, being movable parts of the track, are required to be operated to permit the wheels to pass from one set of rails to another.

The layout of the tracks at any given point on a railroad may be very simple, consisting of one single track crossing another or a single side track connected to a main track; or it may be extremely complicated, comprising four or more main tracks and a system of crossovers connecting them together with switches leading to and from yards or side tracks. It is evident that if several train movements are to occur upon these tracks at the same time, the switches and crossovers should be so arranged as to provide for the greatest possible number of train movements without the interference of one train with another. When the large number of movements, that is possible upon any complicated layout of tracks, is considered, it is at once seen that the number which can be made simultaneously is small compared with the number which conflict, and to prevent the interference of one train with another means must be provided for controlling their movements. In yards and to some extent upon main tracks where the volume of traffic is light or the arrangement of tracks simple, this control of train

movements may be exercised by a switchman through the means of hand signals, though it is desirable and usual to use fixed signals for this purpose. These signals, by the position of their arms by day and by the display of colored lights by night indicate whether trains must "Stop" or may "Proceed."

Where only a few switches are provided at any given place on a railroad, it is customary to operate or throw them by means of levers mounted on some form of fixed stand and connected by short rods to the switch rails. It is evident that at any place on the road, such as at a junction or a yard, where there are a considerable number of switches which are frequently operated, it would require the services of a considerable number of switchmen to throw these switches for the various train movements. It is also evident that if several switches which are to be handled by one man are remote from one another, considerable time and the services of a number of men can be saved if the levers used to throw the switches can, by extending the operating connections, be concentrated at one point. In the same way, signals used to govern the movements of trains over the various tracks, may have the connections used for operating them so extended that the operating devices for a number of signals may be concentrated at one point. The concentration of a considerable number of switch or signal levers in the hands of one man would naturally result in the operator at some time mistaking the lever which he was to throw and a train through this error might be derailed or diverted from its proper course, or a signal permitting a certain movement might be displayed at the same time another signal permitting a conflicting movement was given. To prevent occurrences of this kind, the various levers operating a number of switches and signals are placed together in one bank or stand and are so interconnected that only proper and non-conflicting movements can be made. This in-

terconnecting of devices used to operate switches or signals so that their movements can only occur in predetermined ways is called "Interlocking" and the assemblage of the necessary stands, levers and connections between the levers is called an "Interlocking Machine."

If enginemen in control of trains are to be given authority to proceed by the indications of any fixed signal, it is highly important that the track or route over which they are to proceed should be a safe and proper one for the train to take. To be a safe and proper route for the movement of a train, the track must fulfil two conditions: First—It must be a route which is physically intact for the passage of the wheels of a train; and second—It must be a route upon or with which no conflicting movement can be permitted at the same time. To secure a route which is physically intact for the passage of the wheels of a train, it is necessary that the movable portions of the track should be capable of being freely moved, accurately aligned and securely locked.

To operate the switches or movable point frogs of a track layout it is necessary that power be applied manually through the medium of mechanical connections or through the agency of pneumatic, electric or other motors. In order to align these moving parts accurately the mechanisms which operate them must be capable of precise movement. To lock them securely, means must be provided not only of sufficient strength for securing the switches against any improper movement, but of insuring that they cannot be locked unless they are in certain exact positions.

As these movable parts or switches are operated from levers located at a distance by means of some physical connection, it is important to provide means to prevent their being moved during the passage of a train.

In order to be certain that switches are not moved while a train is passing over them, some apparatus must be used which is so affected by the wheels of the train that the movement of a switch or the movement of the

device which locks it is prevented while the wheels are standing upon or passing over the switch itself. The apparatus generally employed for this purpose consists of a long bar of steel lying closely against the outside of the head of one of the rails of the track for a length of about fifty feet and connected to the rail by pivoted links and to the lock or switch in such manner that if the lock or switch is moved, motion will be communicated to the bar in such a way as to move it longitudinally. The length and arrangement of the links are such that this lengthways movement must result in raising the bar a slight distance above the rail. It is readily seen that if the wheels of a car or engine were standing at this point, the treads of the wheels which overhang the head of the rail on the outside, would prevent the movement of the bar and thus the movement of the lock or switch. Such devices are known as "Detector Bars." Sometimes electric means are employed whereby the presence of the wheels of a train upon a given section of track will operate to lock electrically the lever controlling the movement of a given switch.

We have briefly noted above the various functions of the switches, locks, detector bars, signals, etc., and it at once appears from the descriptions given that before a train should proceed over any given route, the movement over which is governed by fixed signals, certain movements of the apparatus should take place in the following order:

First:—The signals on all routes which would conflict with the route which is to be given, should be placed in the position to indicate "Stop" to all opposing trains.

Second:—The switches or other movable parts of the track should be placed in the proper position to cause the wheels to move in the desired path.

Third:—The switches should be securely locked and the means of preventing their being unlocked while the

wheels are passing, should be placed in position to be affected.

Fourth:—The proper signal to permit the movement over the route established should be placed in the position to indicate "Proceed."

In order to compel the signalman to make these movements in the proper sequence without error, it is necessary that some appliances be used to actually prevent the movement of the levers, which operate the various switches, locks, detector bars, signals, etc., occurring in any other than the prescribed order. The appliances used in the interlocking machine for securing this proper sequence of moving, or locking, by holding certain levers in certain positions while other levers may be moved, or held, in their positions, is known as mechanical locking, though more commonly referred to by the name of "Locking."

CHAPTER II.

INTERLOCKING MACHINES.

Saxby & Farmer and Style "A."

It is not proposed in this work to treat at length of track layouts or their adaptation to various classes of train movement, nor to consider in detail the various types of signals or apparatus for operating and locking switches. These devices will be considered only as the operated units of an interlocking plant, in connection with a study of the devices and methods used for insuring their movement in proper sequence and relation for the control of trains.

While a knowledge of the track and signal layout at any given interlocking plant is, of course, essential before an intelligent study of the locking itself is made, it is desirable to describe the various types of interlocking machines and their parts before taking up the relation of these various parts to the switches and signals whose movements they control.

Interlocking machines are composed of a number of levers placed in a frame, as shown by the illustrations herein. These levers extend about four feet above the operating floor, so that they may be conveniently operated by the signalman, and are so mechanically interlocked with one another that it is impossible for the signalman to set at "Clear" the signals for two conflicting routes at the same time. This method of interlocking the levers will be thoroughly explained under the heading "Locking," Chapter IV.

There are many different types of these machines manufactured, both for mechanical and power plants. The latter will be referred to only in so far as the locking used in connection with them is concerned.

Interlocking machines are usually installed in suitable two story buildings commonly termed "Signal Towers," or "Signal Cabins," which are centrally located with reference to the functions which are operated from them, the tower being so placed as to enable the signalman to be near the apparatus which he controls and thereby facilitate its operation; also to secure, as far as possible, an equal distribution of the total amount of force necessary to operate the levers. It can be easily understood that if a tower were placed say two hundred feet south of the approximate center of the plant, the signalman would have to exert, in the case of a manually operated plant, the additional force necessary to operate the extra two hundred feet of connections between the levers and the functions controlled at the north end of the interlocking.

There are two machines used, where eight levers or more are required, which cover approximately ninety per cent. of the total output of all mechanical machines manufactured. They are commonly known as the Saxby & Farmer machine (Fig. 1) and the Style "A" (Fig. 4), the former having the horizontal type and the latter the vertical type, of locking.

When calculating the number of levers which are needed for the proper operation of the apparatus constituting an interlocking plant, the fact that the machines are built in four and eight lever sections should be taken into consideration. It is also necessary to arrange for a number of spare spaces, or levers, sometimes both, to properly provide for the additional protection which may be required on account of change in the existing track layout, or for additional tracks installed after the plant has been put in service. The number of these is fre-

quently governed by local conditions, but in most cases it is desirable to provide spare spaces, or levers, equal to at least fifteen per cent. of the total number of working levers.

When arranging the order of levers and spare spaces or levers in a machine, it is well to take into consideration the fact that the existing tracks and signals may be changed, or other tracks and signals added, so that when changes are made and new functions connected to new levers in the machine, a convenient order of the levers will be maintained for operating purposes, without renumbering any of the existing levers and thereby necessitating additional changes in the connections to the apparatus already installed and to the locking in the machine.

Figures 1 and 4 show the two mechanical interlocking machines which are most generally used at the present time. They are known as the Saxby & Farmer and the Style "A," respectively. Following each illustration is an index of the various parts, some of which are self-explanatory. A short description of the remainder will be given.

INDEX TO PARTS OF SAXBY & FARMER MACHINE.

HORIZONTAL LOCKING.

1. Lever.
2. Latch handle.
3. Latch rod thimble.
4. Latch rod.
5. Rocker die.
6. Latch spring.
7. Latch shoe.
8. Rocker.
9. Quadrant.
10. Lever shoe.
11. Machine leg.
12. Back tail.
13. Front tail (part of lever No. 1.)

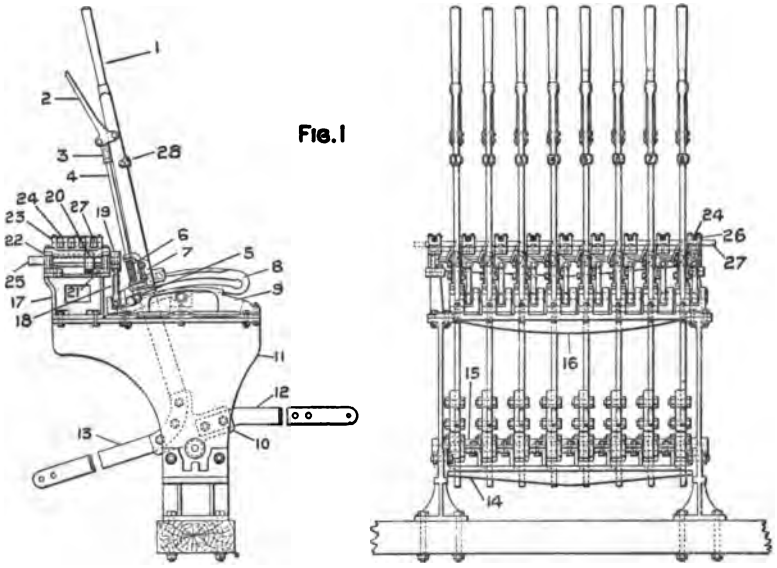

FIG. 1

SAXBY AND FARMER INTERLOCKING MACHINE

14. Bottom girder.
15. Cap for bottom girder.
16. Top plate.
17. Locking bearing.
18. Universal link.
19. Crank.
20. Locking bar driver.
21. Front rail with cap.
22. Back rail.
23. Locking bracket.
24. Locking bracket cap.
25. Locking shaft.
26. Cross locking.
27. Longitudinal locking bar, or tappet.
28. Number plate.

THE SAXBY & FARMER MACHINE—HORIZONTAL LOCKING. VERTICAL LEADOUT.

The latch handle 2 is pivoted on the lever 1 and on the latch rod thimble 3. This, therefore, imparts motion, when operated, to the latch rod 4 and the rocker die 5.

The latch rod thimble 3 is used to adjust the length of the latch rod 4.

The adjustment of the latch rod thimble affects the throw of the locking; for instance, the full throw of the locking bars in this machine is 1¾″, one-half of which is given by raising the latch with the lever in one position, and the other half by lowering the latch with the lever in the opposite position. These throws are slightly varied by the adjustment of the latch rod thimble, but the full throw of the locking bar remains the same.

The rocker die 5 makes the connection between the latch rod and the rocker.

The latch spring 6 is compressed when the latch handle 2 is raised; therefore, upon releasing the latch handle, it is returned to its normal position by the spring 6, unless the lever is between the normal and reverse positions and,

in consequence, the foot of the latch rod 4 (see detail Fig. 2) is held on top of the quadrant 9.

The latch shoe 7 holds in position the spring 6 and the latch rod 4, and also acts as a guide for the rocker.

The rocker 8 is pivoted on the quadrant 9. The quadrant also acts as a guide for the lever 1.

To the lever is bolted the lever shoe 10 which, in its turn, is pivoted on the pin resting on the bottom girder 14.

The back and front tails 12 and 13 are used to connect the levers to the apparatus controlled.

The bottom girder 14 is used to support the levers.

Cap 15, for the bottom girder 14, holds in position the pin on which lever shoe 10 is pivoted.

The top plate 16 carries the quadrants 9 which are bolted to it. Slots are cored in this plate to allow the levers to extend through it.

The locking bearing 17 supports the front rails 21 and back rails 22 which, in turn, act as bearings for the locking shaft 25 and as supports for the locking brackets 23 (see detail Fig. 9).

The universal link 18 connects the rocker 8 to the locking shaft crank 19.

The crank 19 is rigidly attached to the locking shaft 25.

The locking bar driver 20 is fastened to the locking shaft 25 and, when operated, drives the longitudinal locking 27 (Fig. 3).

The locking brackets 23 support the longitudinal locking 27 and the cross locking 26 (Fig. 3).

The locking bracket caps 24 are used to hold the locking 26 and 27 in position (see detail Fig. 9).

The locking shaft 25 makes the connection between the crank 19 and the locking bar driver 20.

Figure 3 shows a perspective view of cross locking 26 and longitudinal locking 27.

A number plate 28 is placed on each lever. Levers are

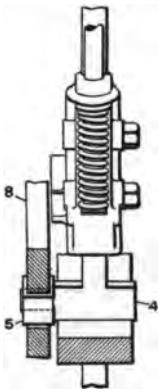

SECTION A A

FIG. 2

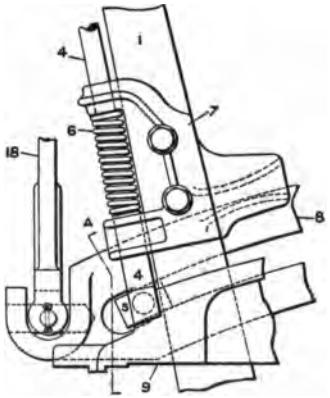

SAXBY AND FARMER MACHINE.– DETAILS OF LATCH ROD FOOT.

FIG. 3

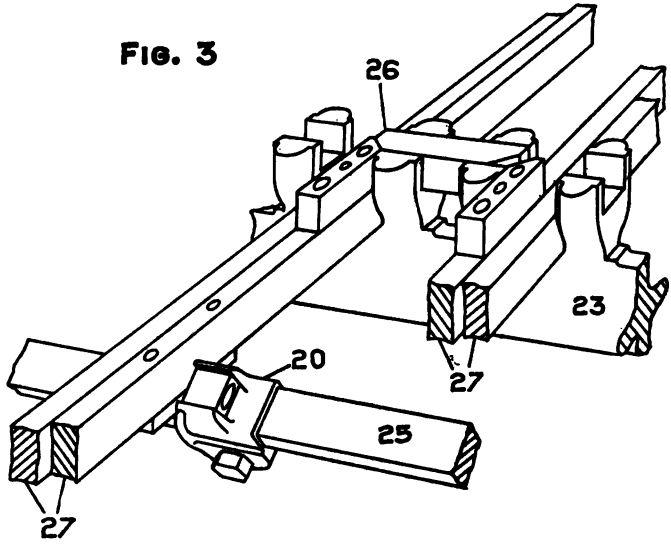

SAXBY AND FARMER LOCKING

numbered consecutively from left to right, beginning with No. 1.

The levers as shown in the machine are said to be in the normal position; when in the opposite position, they are said to be reversed.

The locking shafts 25, when operated, turn in bearings on the rails 21 and 22.

To convey a clear idea of the operation of the locking in an interlocking lever machine, it will be necessary to give an explanation of Preliminary Latch Locking.

A lever in a machine is held in position until the latch rod foot (Fig. 2) has been raised above the quadrant, by the raising of the latch handle. Through the rocker and locking shaft, this movement of the latch handle imparts one-half of the full throw to the longitudinal locking which, in turn, actuates the cross locking and locks all conflicting levers that before this action were unlocked, and keeps locked all levers that should remain locked until the lever is moved to its opposite position and the latch rod foot has, by the lowering of the latch handle, engaged with stop on the quadrant, thereby holding the lever in this position and completing the throw of the longitudinal locking.

It can be readily understood from the above explanation that the throwing of the lever does not transmit any motion to the locking and that it is impossible to release, by raising the latch, a lever which should not be thrown.

As very little power can be applied through the medium of the latch handle, the strain on the locking is small compared with that in machines where the locking is actuated by the movement of the lever.

When a signalman desires to operate a lever, he raises the latch handle, which action releases the lever and imparts an upward motion to the latch rod and rocker die, giving the rocker one-half of its full throw. The rocker transmits an upward motion to the universal link which, through the medium of the crank, turns the lock-

ing shaft. This turning of the locking shaft gives, through the locking bar driver, one-half of the throw to the longitudinal locking and this, in turn, gives the full throw to the cross-locking. When the lever is fully moved to the opposite position, the latch spring forces the foot of the latch rod into engagement with the stop on the quadrant, thereby imparting the other half of the throw to the rocker and, consequently, to the longitudinal locking.

INDEX TO PARTS OF STYLE "A" MACHINE.

VERTICAL LOCKING.

1. Lever.
2. Latch handle.
3. Latch rod.
4. Latch shoe.
5. Latch spring.
6. Latch block.
7. Segment.
8. Rocker.
9. Rocker guide.
10. Back girder.
11. Front girder.
12. Machine leg.
13. Lever shoe.
14. Cap for bottom girder.
15. Back tail.
16. Front tail.
17. Tappet connecting link.
18. Tappet jaw.
19. Tappet.
20. Bottom girder.
21. Locking plate.
22. Front locking guides.
23. Locking plate strip.
24. Back locking.
25. Front locking.
26. Number plate.

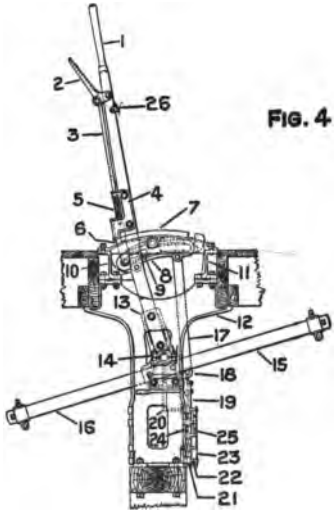

FIG. 4

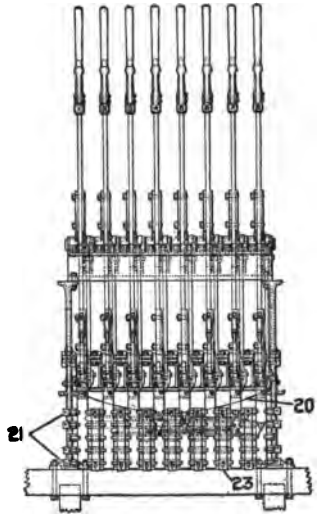

STYLE "A" INTERLOCKING MACHINE

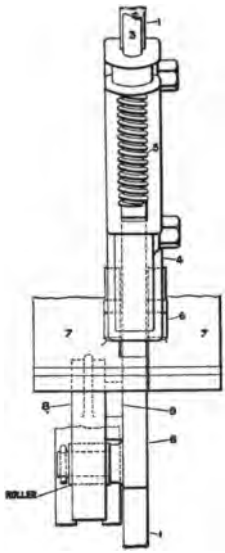

FIG. 8

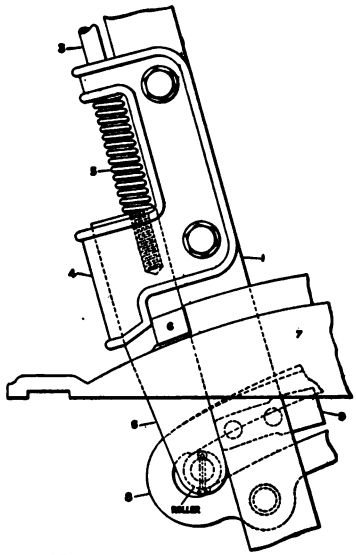

STYLE "A" MACHINE
DETAIL OF LATCH BLOCK

STYLE "A" INTERLOCKING MACHINE.

VERTICAL LOCKING.

As many of the parts of the Style "A" machine (Fig. 4) are similar to those of the Saxby & Farmer (Fig. 1), such parts only as are not similar will be explained.

The latch block 6 and roller (see detail Fig. 5) do the same work as the foot of the latch rod and the rocker die, combined, in the Saxby & Farmer machine. The latch block 6 is also used to adjust the length of the latch rod. The adjustment of the latch block also affects the throw of the tappet, through the medium of the rocker and connecting link. For instance, the full throw of the tappet is 1 1/16″, one-half of which is given by the raising of the latch handle to release the lever, and the other half by the lowering of the latch handle causing the latch block to engage with the stop on the opposite side of the segment. These throws are slightly varied by the adjustment of the latch block, but the full throw remains the same.

The segment 7 is of a different design, but performs the same work as the quadrant used with the Saxby & Farmer machine.

The rocker 8 has a lug cast on one end which extends through and above the segment and upon which the signalman may press with his foot, that he may raise with less effort, the latch handle 2. The rocker guide 9 which is riveted to the lever, acts as a guide for the rocker.

The back and front girders 10 and 11, respectively, support the segments. The back girder also acts as a stop for the levers.

The tappet connecting link 17 connects the rocker 8 to the tappet 19. The tappet jaw 18 is rigidly screwed to the tappet 19. The tappet 19 directly actuates the back and front locking, 24 and 25, respectively (see detail Fig. 11).

The locking plate 21 supports the back and front locking 24 and 25 and guides the tappets 19. The front locking guides 22 are screwed to the locking plate 21, to support and guide the front locking 25. The locking plate strip 23 is placed in front of the front locking 25 to hold it in place. The back locking 24 is placed in the same plane as the tappets between which this locking is accomplished. The front locking 25 is placed in front of the back locking (see detail Fig. 11).

The operation of the Style "A" machine is practically the same as that of the Saxby & Farmer, and is as follows:

When the signalman desires to operate a lever, he first raises the latch handle, which, in its turn, raises the latch rod and latch block and compresses the latch spring. This releases the lever and at the same time gives the rocker one-half of its throw. The rocker transmits its throw to the locking through the medium of the connecting link and tappet. When the lever has been moved to the opposite position, the latch spring forces the latch block into engagement with the stop on the segment and it thus imparts the other half of the throw to the rocker and, consequently, to the locking.

Details of the devices previously referred to as "Locking" are shown in Figure 6 and are followed by a numerical index. These are the locking devices for use with the Saxby & Farmer machine. The index explains what the majority of these are used for but, that they may be more clearly understood, a plan view, together with end and side views of the locking as it is placed in the machine, is shown in Figure 9. The plan view illustrates where the various parts can be used, each part being numbered and described in the index.

This plan of locking is called a dog chart, although, when drawn up for the purpose of constructing the locking, the drawing is simplified, as shown in Fig. 23, No. 3. Dog charts for Saxby & Farmer machines are

FIG. 6

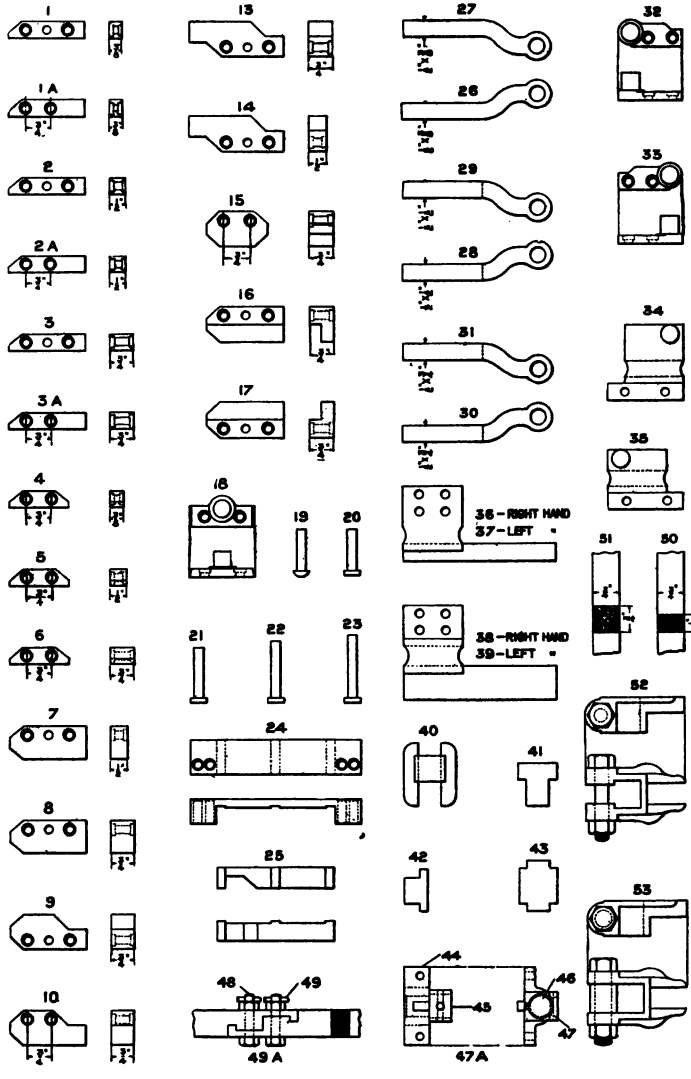

SAXBY AND FARMER MACHINE — LOCKING DETAILS

laid out, assuming a person is looking at the locking from the back of the machine. The arrow at the bottom of the figure indicates the direction in which the longitudinal bars travel when a lever is reversed.

Locking dogs 1 to 10 and 13 to 17, all inclusive, are known to the manufacturers by these numbers, and dogs may be ordered simply by referring to their respective numbers.

SAXBY & FARMER MACHINE—INDEX TO LOCKING DETAILS.

1. No. 1 Locking dog, ⅜″ x ½″.
1A. No. 1A Locking dog, ⅜″ x ½″.
2. No. 2 Locking dog, ½″ x ½″.
2A. No. 2A Locking dog, ½″ x ½″.
3. No. 3 Locking dog, ¾″ x ½″.
3A. No. 3A Locking dog, ¾″ x ½″.
4. No. 4 Locking dog, ⅜″ x ½″.
5. No. 5 Locking dog, ½″ x ½″.
6. No. 6 Locking dog, ¾″ x ½″.
7. No. 7 Locking dog, ½″ x 1″.
8. No. 8 Locking dog, ¾″ x 1″.
9. No. 9 Locking dog, ¾″ x 1″.
10. No. 10 Locking dog, ¾″ x 1″.
13. No. 13 Locking dog, ¾″ x 1″.
14. No. 14 Locking dog, ½″ x 1″.
15. No. 15 Locking dog, ¾″ x 1″.
16. No. 16 Locking dog, ¾″ x 1″.
17. No. 17 Locking dog, ¾″ x 1″.
18. Right or left hand trunnion.
19. Rivet, ¼″ x 1 5/16″, for fixing 44 to locking bars.
20. Rivet, ¼″ x 1 1/16″, for trunnions.
21. Rivet, ¼″ x 1 7/32″, for ⅜″ Locking dogs.
22. Rivet, ¼″ x 1 11/32″, for ½″ Locking dogs.
23. Rivet, ¼″ x 1 19/32″, for ¾″ Locking dogs.
24. Special locking dog guide.
25. Special locking dog.
26. Left hand swing dog, ⅜″ thick.
27. Right hand swing dog, ⅜″ thick.

28. Left hand swing dog, ½″ thick.
29. Right hand swing dog, ½″ thick.
30. Left hand swing dog, ¾″ thick.
31. Right hand swing dog, ¾″ thick.
32. Left hand trunnion.
33. Right hand trunnion.
34. Left hand special reach trunnion.
35. Right hand special reach trunnion.
36. Right hand special reach dog, ½″ wide.
37. Left hand special reach dog, ½″ wide.
38. Right hand special reach dog, 1″ wide.
39. Left hand special reach dog, 1″ wide.
40. Filling piece for locking bar.
41. Filling piece for cross locks.
42. Filling piece for cross locks.
43. Filling piece for cross locks.
44. Locking bar driver.
45. Locking bar driving block.
46. Locking bar driving stud.
47. Steel pin, ⅛″ x ⅞″, for fastening 45 to 46.
47A. Locking bar driver, block and stud comp.
48. Hex. bolt and nut, ¼″ x 1 9/16″, for making splice in locking bars.
49. Cotter pin, 3/32″ x ⅝″, for 48.
49A. Locking bar, splice comp.
50. Locking bar, ½″ x ¾″, C. D. steel, used for longitudinal bars (tappets).
51. Locking bar, ¾″ x ¾″, C. D. steel, used for cross locks.
52. Locking bar driver.
53. Locking bar driver.

Locking dogs 1A, 2A and 3A are the same as 1, 2 and 3, without the dowel holes between the rivet holes, and are used only by those who do not desire to have these dogs doweled to the bar. Dogs 10 and 15 have no dowel pins, owing to there being no space for them between the rivets.

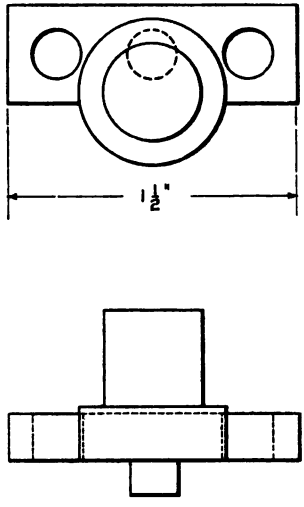

UNIVERSAL TRUNNION

FIG. 7

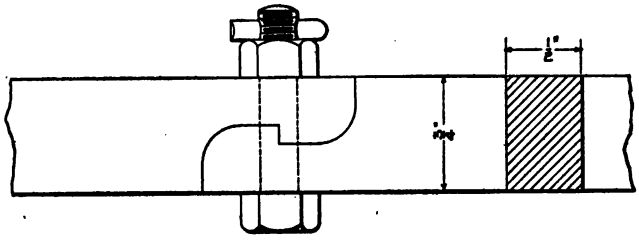

Fig. 8

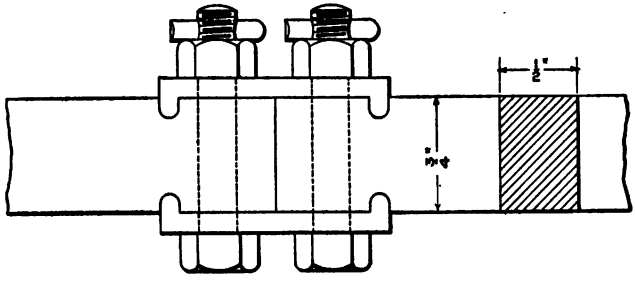

SAXBY AND FARMER BAR SPLICES

The right and left hand, or double, trunnion 18 is made of brass and is used as shown in Figure 9, where there is not room to place trunnions 32 and 33.

Another double or universal trunnion (Fig. 7), which is made of wrought iron, is used by one manufacturer in place of 18, 32 and 33, and is found to give good service. The bar is bored to receive the lug on the bottom of the trunnion; when this is riveted to the bar, it makes a very rigid connection and, being made of wrought iron, wears well.

Figure 8 shows two methods employed to splice the longitudinal locking bars, which differ from the method illustrated in Figure 6.

Special locking dog 25, with its guide 24, has practically gone out of service, as the special swing dogs 26 to 31, inclusive, give better results.

Special swing dogs 26 to 31, inclusive, are used to transmit motion from one piece of cross-locking to another, under certain conditions. For instance, in bracket "E" (Fig. 9), when the lever operating longitudinal bar 13 is in the normal position, the special dog 29, pivoted on this bar, is not in a position to transmit movement from one of the adjacent pieces of cross-locking to the other, but when the lever operating bar 13 is in the reversed position, the special dog 29 will be in a position to transmit movement between the two adjacent pieces of cross-locking.

It is rarely necessary to use right and left hand special reach trunnions 34 and 35, except where a machine is crowded with locking and a complicated change is necessary after the machine has been installed. This is also the case with right and left hand special reach dogs 36, 37, 38 and 39.

Locking bar driver 52 is used when constructing the machine, as it can then be passed over the end of the locking shaft before the shaft is placed in the machine, while driver 53 is used after the machine has been built,

as it can be placed on the locking shaft without removing the shaft from the machine.

A cap is shown on the first locking bracket (Fig. 9), the rest having been omitted that they may not interfere with the view of the locking.

The throw of the longitudinal locking in the Saxby & Farmer machine is one and three-quarter inch and, of the cross locking, three-eighths of an inch.

The noses of the special dogs and of the special reach dogs are cut at an angle of 45 degrees when it is decided where they are to be used.

The numbers 1 to 16, inclusive, which are placed at the top of the plan view of the locking (Fig. 9), directly over the cranks, represent the numbers of the levers which operate these shafts.

The numbers 1 to 16, inclusive, which are shown at each end of the plan view, opposite the locking bars, are used as reference numbers, to locate dogs, etc.

The number of longitudinal locking bars which can be used in a machine is practically unlimited, as it is only necessary to substitute larger or smaller locking brackets and bearings, as the case may require.

It is rarely necessary to employ more bars than there are levers in the machine and, when a machine contains forty or more levers, the number of bars can be reduced, still leaving plenty of space for additional locking and, at the same time, decreasing the width of the machine, which is necessary where a tower can be only of a given width.

A machine having sixteen longitudinal locking bars requires an eight-way locking bracket, two bars being placed in each space or way.

The locking bar drivers, designated by circles, are numbered on dog charts to correspond to the levers controlling them (Fig. 23, No. 3), but the numbers have been omitted from plan view (Fig. 9) in order to avoid confusing them with index numbers.

The two special dogs which are placed directly to the left of locking shaft 9, on bar 10 (Fig. 9), must be so arranged that they both can be pivoted on the same trunnion. This is done by reducing the thickness of the dogs where they pivot. The necessity for this construction, however, seldom arises.

Although ten brackets only are used in illustration Figure 9, it is possible to have in any machine one more bracket than the total number of levers and spare spaces, or levers constituting the machine; for instance, seventeen brackets can be used with a machine constructed for sixteen levers.

Locking brackets are constructed in 4, 6, 8, 10, 12, 14, 15, 16, 18 and 20 ways. When it is necessary to employ more than forty bars, necessitating brackets with more than twenty ways, a boss is cast on the center of the locking bearing, upon which is placed an intermediate rail which supports one end of the locking brackets, the other ends being supported by the back and front rails; for instance, if it was found necessary to use forty-eight bars, two twelve way locking brackets could be used.

Two drivers can be placed on one locking shaft, as illustrated on lever 12, Fig. 9, but one usually suffices.

All dogs, etc., in the figure, on which numbers are not shown, are similar to others that are numbered.

It is possible to place in one space two bars operated by separate levers, as in the case of levers 1 and 12, the drivers for these levers being placed on bar 3, and the bar cut directly to the left of locking shaft 3.

For explanatory purposes the locking brackets are lettered consecutively from right to left, beginning with "A." These letters are located between the plan view and the side elevation.

In bracket "A" is shown a cross lock filler 43, which holds bars 3 and 4 from raising and drawing the driving block 45 out of the jaws of the driver 52. (See side view between brackets "C" and "D.") This filler is a sub-

stitute for the cross-locks, which are unnecessary at this point.

Filler piece 40 is adapted for use as shown in Fig. 9, Bracket "B." It holds the bar, located in the same place, from springing to one side, thereby preventing the operation of the lever controlling this bar, as it should remain locked with the locking arranged as shown. This filler takes the place of the bar, which has been cut off directly to the left of bracket containing the filler. Cross-lock fillers 41 and 42 accomplish the same work as filler 40, but are used under slightly different conditions. Filler 41 takes the place of 43 where one end of the latter cannot extend into the locking bracket; 42 is used where only one bar is to be held in position.

The cross-lock in bracket "B" is cut so as to allow it to slide over dog 14 and butt against the cross-lock on the opposite side of this dog. Dog 14 covers bars 5 and 6, but is attached only to the bar in which the rivets are shown.

In bracket "C" the cross-lock is extended above bar 11, in order to have it as long as possible.

In bracket "D," on bar 12, is shown a three-eighths special. This size is essential, as it is necessary for the special to swing over the three-eighths No. 4 dog beneath it.

Special reach dog 37, used in connection with the cross-lock in bracket "E," illustrates the method employed to lock a dog through a special when the bars upon which the special and the dog occur are in the same space. The special is shown on bar 13 and the dog on bar 14. A one-half inch special is necessary at this point, to allow the special to slide over the riveting part of dog 37. Special reach dog 39 would have been necessary in place of 37, if it had been locked from both sides, as shown in dotted lines.

Sliding special 25, with its guide 24, is shown on bar 10, bracket "G." The same results are obtained with

this as with the special swing dog. In this bracket is also shown a half-inch double dog 7, attached to bar No. 8. The butt is similar to the one explained and illustrated in bracket "B."

Special reach trunnion 34, used in connection with cross-locks in bracket "H," is employed for the same reasons that the special reach dogs are used, except that in this case it is necessary to raise the special.

The locking bar splice on bar 7, between brackets "I" and "H," is shown to illustrate how this is applied, although its use is unnecessary except in large machines where locking bars of considerable length are required.

A No. 3 dog, shown in solid lines, and a No. 1 dog, shown in dotted lines, on bars 1 and 2, respectively, in bracket "I," illustrate how two dogs can be placed on two adjacent bars located in the same space, either one of which will operate the cross-lock used in connection with it. The cross-lock is cut so as to allow it to project over the three-eighths dog and thus come into contact with the three-quarter dog.

In bracket "J" are illustrated dog 17, riveted to bar 12 and, directly beneath it, dog 1, riveted to bar 11. In this particular instance, if either bar 11 or 12 is operated, it will actuate cross-lock 51 and lock both dogs on bars 7 and 8.

That part of the figure which is entitled "Locking Sheet" describes the interlocking between the levers in a machine.

The circles around the numbers, under the column headed "Locks," show that these levers are to be reversed under certain conditions. For instance, to read a locking sheet proceed as follows:

1 reversed locks no levers.
2 reversed locks 1 normal.
3 reversed locks 2 reversed, and 1, 13, 12 and 6 normal.

4 reversed locks 11 normal or 11 reversed—12 normal or 12 reversed—and, when (W) 7 is reversed, locks (X) 14 reversed, etc.

Assuming that all levers are standing in the normal position, the signalman can reverse lever 1, but before he can reverse lever 2 he must return lever 1 to the normal position, as lever 2 reversed locks lever 1 normal.

Again, assuming that all levers are normal, the signalman endeavors to reverse lever 3, but cannot do so until lever 2 is reversed, as lever 3 reversed locks lever 2 reversed. When lever 3 is partly or fully reversed, he cannot throw lever 2 back to the normal position, nor reverse levers 1, 6, 12 or 13, as when lever 3 is partly or fully reversed it locks these levers in their normal position.

The signalman again returns all levers to the normal position, after which he reverses lever 7, then tries to reverse lever 4, but cannot do so, because when lever 7 is reversed, lever 14 must be reversed before he can reverse lever 4.

The locking as given above can be easily traced on the figure. This figure is given to illustrate all the various locking parts used in connection with the Saxby & Farmer machine. The locking sheet does not cover any particular arrangement of switches and signals.

STYLE "A" MACHINE—INDEX TO LOCKING DETAILS.

1. No. 1 Front locking dog.
2. No. 2 " " "
3. No. 3 " " "
4. No. 4 " " "
5. No. 5 " " "
6. No. 6 " " "
7. No. 7 Front coupling dog.
8. No. 8 Special swing dog.

9A. No. 9A Tappet piece.
9B. No. 9B " "
10A. No. 10A " "

10B. No. 10B Tappet piece.
11. No. 11 " "
12. No. 12 " "
13. No. 13 Back locking dog.
14. No. 14 " " "
15. No. 15 " " "
16. No. 16 " " "
17. No. 17 Back coupling dog.
18. No. 18 Back carrier dog.
19. No. 19 " " "
20. No. 20 Front locking dog.
21. No. 21 Front carrier dog.
22. No. 22 Front locking dog.
25. No. 25 " " "
26. No. 26 " " "
27. No. 27 " " "
28. No. 28 " " "
29. No. 29 " " "
30. No. 1 Front locking guide.
31. No. 2 " " "
32. No. 3 " " "
33. No. 4 " " "
34. Special stud for use with 30.
35. Special stud for use with 32.
36. 14-24 x 1⅛″ round head machine screw for fastening front locking guides 30, 31, 32 and 33 to locking plate.
37. 14-24 x ⅜″ machine screw for use with 34 and 35.
38. 14-24 x ¾″ Filister head machine screw for fastening tappet pieces to tappet.
39. 10-32 x 13/16″ flat head machine screw used for fastening front locking dogs, couplers and carriers to locking bar 42.
40. 10-32 x 15/16″ flat head machine screw used for fastening back locking dogs, couplers and carriers to locking bar 42.

41. Stud for fastening and pivoting special swing dog 8 on tappet.
42. Locking bar.

Details of the various devices used in the construction of the locking for the Style "A" machine are illustrated in Fig. 10 and are followed by a numerical index of these parts. A plan view, together with end and side elevations (shown in Fig. 11) illustrates where the different locking parts may be used, each part being marked with its corresponding index number. Such parts as are not numbered are similar to other parts which are numbered. This plan of locking is called a dog chart, although when laid out for construction purposes it is simplified as shown in sketch headed "Dog Chart." The numbers of the dogs shown on the dog chart correspond to those shown on the plan view and are so indicated, in order to simplify the reading of the latter.

The locking dogs 1 to 22 and 25 to 29, all inclusive (Fig. 10), are known to the manufacturers by these numbers and may be ordered simply by referring to their respective numbers and stating how the dogs are to be drilled.

The back locking dogs are 1 3/16″ wide and 9/16″ thick, and the front locking dogs, with the exception of special swing dog 8, and certain dogs used in connection with it, are 2″ wide and ½″ thick. All of the above are shaped from steel.

Reference to Fig. 11 shows the numbers of the levers which operate the tappets, placed directly above the tappets.

The locking plate strip, located between levers 15 and 16 and fastened to the front locking guides by means of 34 and 37, or 35 and 37, is used wherever necessary, to hold the front locking in position (see Section A-A.) One locking strip only is illustrated, the balance being omitted that they may not interfere with a clear view of the locking.

FIG. 10

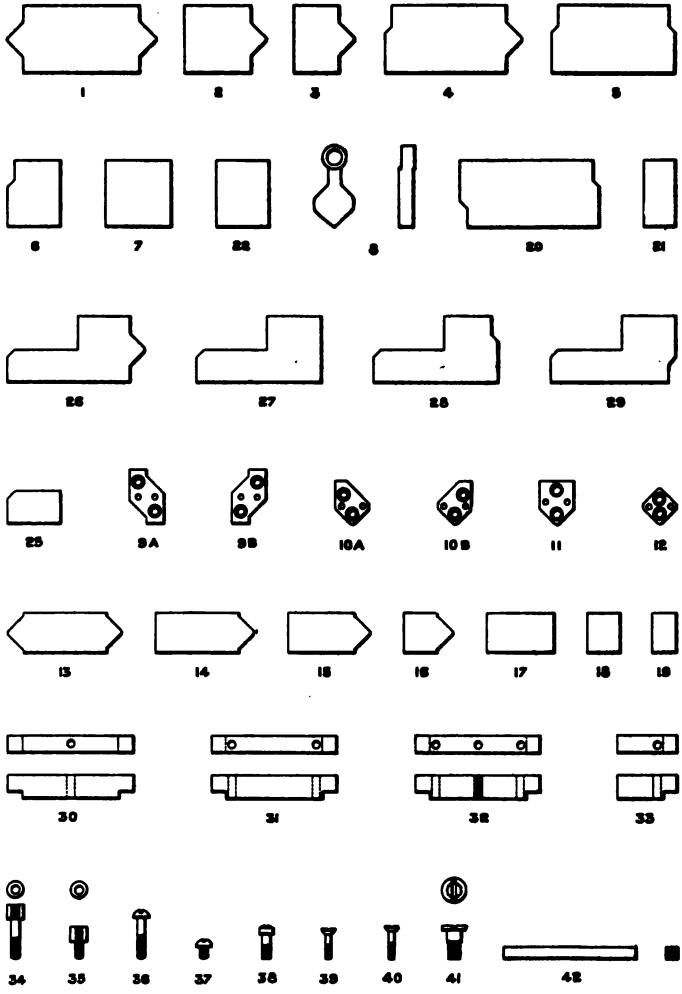

STYLE "A" MACHINE – LOCKING DETAILS

The front locking guides 30, 31, 32 and 33, which are made of steel, are used wherever necessary, to support and guide the front locking (see Sections A-A and B-B). The front locking guides also act as guides for the tappets. Guide 32 is employed, as shown between levers 8 and 9, where the ends of two locking plates are attached to a machine leg, the two outer holes being used to fasten the guide to each of the locking plates; the center hole, whic his tapped, is used to receive the special stud 35, it being impossible to employ stud 34 at this point, as the threaded portion of this stud would extend between the two locking plates. Guide 31 is used at the same point as guide 32, although it is not necessary to have three holes in this guide, the center hole of guide 32 being used only to receive stud 35 and screw 37 which support the locking plate strips, and these strips are supported only at the top and bottom of the locking plate, as illustrated between levers 15 and 16. Guide 33 is used at each end of the locking plates. Guide 30 is used in all places except those enumerated above.

The locking plates, which are attached to and supported by the machine legs, are constructed with four separate spaces for locking, the upper space being known as space 1, the next as space 2, and so on. Two tiers of locking may be placed in each space, the back tier being called the back locking and the front tier the front locking (see Sections A-A and B-B). 4-F and 4-B (see Section B-B) designate, "The 4th space, front locking," and "The 4th space, back locking," respectively. This section also shows the relative positions of the front and back locking dogs and locking bars. It is possible to place three bars, side by side, in the space provided for the back locking bars, and five bars, side by side, in the space provided for the front locking bars (see Section A-A, showing two back locking bars and three front locking bars). The locking bars are made of ⅜″ x ⅜″ C. R. steel.

When there is insufficient space in one tier of locking plates to contain the locking for a given machine, an additional tier of plates is added. This is accomplished by bolting to the bottom of the machine legs extension legs upon which to fasten the added locking plates. These extension legs are similar in design to that part of the machine leg illustrated in Fig. 11. When more than one tier of locking plates is used in a machine, five spaces for locking are added with each additional tier of plates; for instance, one plate provides four spaces for locking, two plates provide nine spaces, three plates provide fourteen spaces, etc. This is explained as follows: when two locking plates are joined together, the space between the lower space of the upper plate and the upper space of the lower plate is utilized as an additional locking space. This can be readily understood by reference to the locking plate in the vicinity of lever 1.

The tappets between which the locking is accomplished are made of soft steel. They move downward when the levers are reversed, their full stroke being 1 1/16″. The inside of the tappet jaw and the flange on one side of the bottom girder (see Section B-B, Fig. 11) are machine finished, to act as a stop to the movement of the tappet in each direction. The stroke of the back and front locking is 7/16″.

The dog chart in the figure illustrates the method employed to clearly show the back and front locking, the back locking for each space being shown above its respective front locking.

Tappet pieces 9A to 12, inclusive, are secured to the tappet by two filister head screws 38, and two dowel pins.

The special features of the locking details illustrated in Fig. 10 will be next explained. Reference to the dog chart will simplify the finding of any dogs, etc., referred to.

Front locking dog 2, located in the 4th space, between tappets 11 and 12, performs the same work as dog 3,

being made longer only that it may be used as a coupling dog, two locking bars being attached to it, as this is sometimes necessary where one long bar cannot be obtained. In the case illustrated, if 2 had been omitted, it would have been necessary for the bar to extend from lever 8 to lever 15. Coupling dogs are seldom required except in large machines necessitating the use of very long locking bars, and are shown in the figure only to illustrate how they may be applied.

Special swing dog 8 is pivoted on special stud 41, which is screwed into the tappet; this, therefore, moves vertically with the tappet. This special swing dog is used to transmit motion from one part of the locking to another, under certain conditions; for instance, lever 2, when reversed, operates the locking in the second space, and while lever 8 remains in the normal position movement is transmitted from dog 6 to dog 5 by special swing dog 8, and if lever 9 remains in the normal position this motion is again transmitted through another special swing dog 8 on tappet 9, to dog 20; then, when lever 10 is reversed, a third special swing dog on tappet 10 continues the motion to dog 4, thereby locking lever 11 in its normal or reverse position. It is apparent that if lever 10 had remained in its normal position, the movement of dog 20 would not have been communicated to dog 4; therefore, the motion transmitted to dog 3 by the reversing of lever 2 would not have operated dog 4, and lever 11 would have remained unlocked.

Coupling dog 7 is required where it is necessary to couple two front locking bars. This is illustrated in the second space, between tappets 4 and 5.

Front carrier dog 21 is shown between tappets 5 and 6, in the first space. It is used wherever necessary to prevent the buckling of long locking bars.

The method of employing dog 22 is illustrated in space 1 between tappets 10 and 11.

Front locking dog 25 is used in conjunction with 26,

27, 28 and 29, which are illustrated in space 1 between tappets 11 and 12; in space 3 between tappets 7 and 8, and 9 and 10, and in space 4 between tappets 7 and 8, and 8 and 9.

Back locking dog 14 is used where it is necessary to connect the back locking to the front locking, under conditions illustrated in the third space, between tappets 10 and 11. Another connection between the front and back locking is shown in space 4 between tappets 9 and 10, a cross-section (A-A) of same being given, showing the front dog 6 and the back dog 16 joined together by means of two screws. This is illustrated on the dog chart by a line extending from one dog to the other and marked "Connect." In this particular instance lever 14 reversed would lock lever 9 normal and reversed, owing to the two dogs being connected.

Locking dog 15 is used in the back locking for the same purpose as locking dog 2 is used in the front locking.

Coupling dog 17 is used in the back locking for the same purpose that coupling dog 7 is used in the front locking.

Back carrier dog 18 is used as illustrated in space 1 between tappets 2 and 3, where locking dog 16, operated by lever 2, locks lever 4 reversed and also butts against carrier dog 18, thus locking levers 7 and 10 in their reversed positions. Lever 3 reversed, which locks levers 7 and 10 reversed, does not lock lever 4 reversed, as when 3 is reversed carrier dog 18 pulls away from locking dog 16. It is apparent, therefore, that this arrangement of butting dogs economizes space, as it enables two levers to lock certain other levers and, in addition, one of these two levers can lock any other lever or levers foreign to those levers locked jointly by the two levers. Carrier dog 18 is also used to make a connection between the front and back locking, similar to the connection shown in space 4, between tappets 9 and 10,

although in this case a locking dog 16 was used, as it was necessary to lock lever 9 normal and reversed. If lever 5, instead of lever 9, had been locked, then a carrier dog 18, with a back locking bar attached to it and extending to lever 5, would have been connected to the front locking dog 6.

Front carrier dog 21 can be used as a butt dog in the front locking, under the same conditions governing the use of back carrier dog 18.

Back carrier dog 19 is used in the same manner as front carrier dog 21, to prevent the buckling of long locking bars.

Coupling and carrier dogs, where used to couple two locking bars or to prevent a locking bar from buckling, are not shown on dog charts, but are located wherever necessary, when the machine is constructed.

This plan of locking (Fig. 11) does not cover any particular arrangement of tracks and signaling in connection therewith.

CHAPTER III.

OTHER TYPES OF INTERLOCKING MACHINES.

The National Interlocking Machine.

The National Interlocking Machine, illustrated in Fig. 12, has practically gone out of service, very few of them having been installed in the past few years. They are now manufactured only for the purpose of supplying new machines or repair parts to railroads, which, in the past, have purchased machines of this type and are still using them.

These machines are constructed in four and eight lever sections. They are somewhat similar in design to the Style "A": the lever, the latch handle and its connections to the rocker, and the rocker and link connecting it to the tappet, varying only slightly in design. The motion imparted to the tappet by the action of moving the latch handle is exactly similar to that of the Style "A" machine (Fig. 4).

The type of locking used is very similar to that used in connection with the Style "A" and Johnson machines (Figs. 4 and 13), although a greater variety of dogs is necessary to secure the same results.

The Johnson Interlocking Machine.

What is known as the Johnson Interlocking Machine is illustrated in Fig. 13.

This machine differs from other machines of the vertical type in that the tappet moves upward when the lever is being reversed, instead of downward; also, the rocker is attached to a bracket which is rigidly connected to the lever and, therefore, moves with it, the connection be-

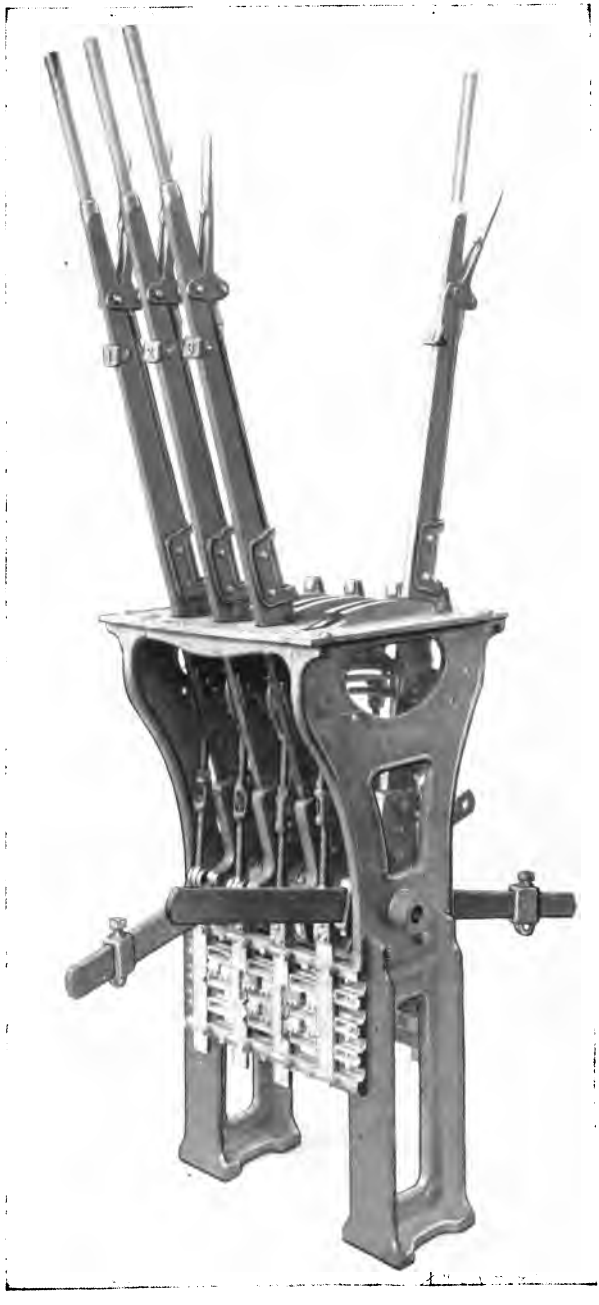

Fig. 12.

NATIONAL INTERLOCKING MACHINE.

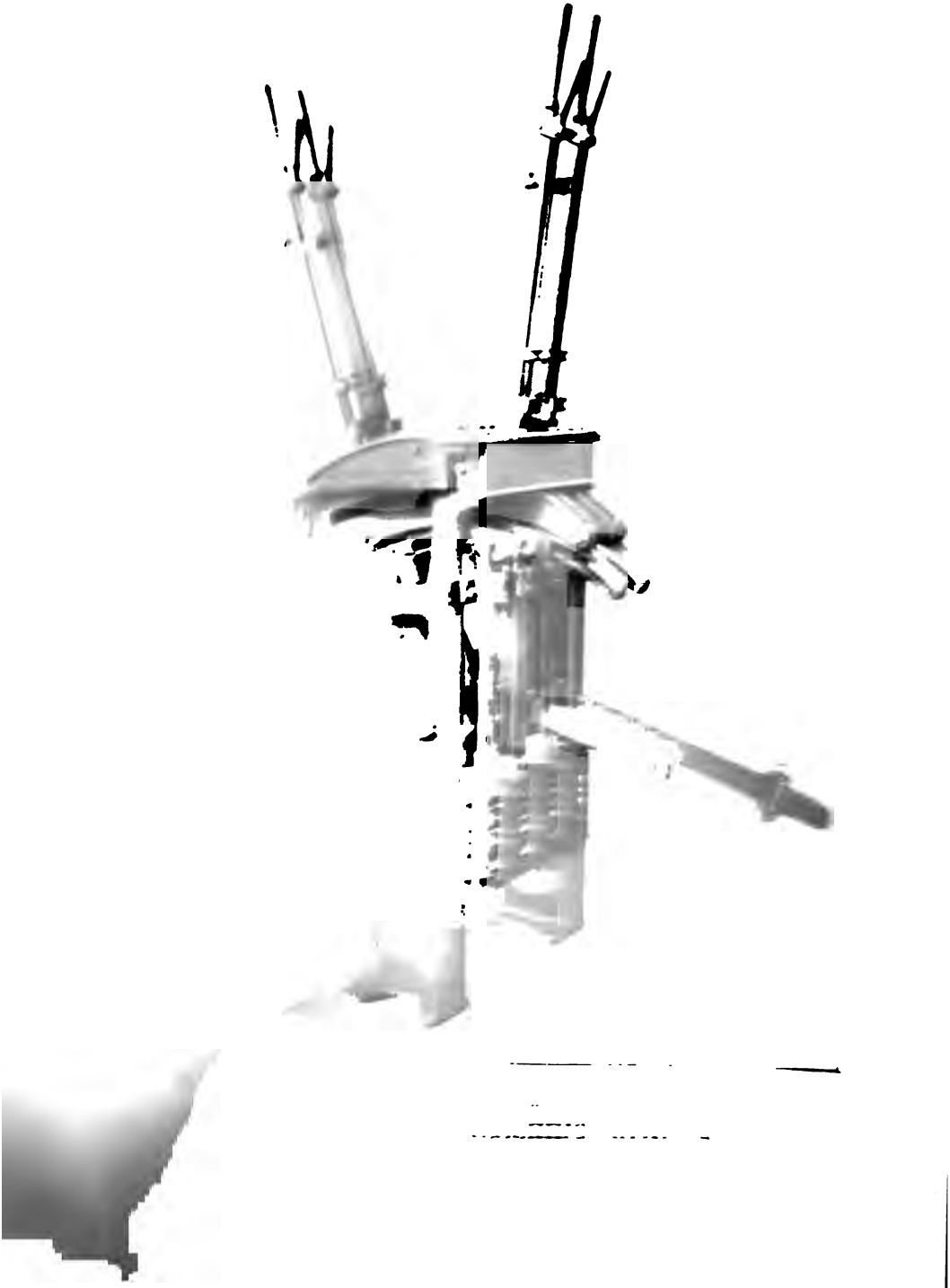

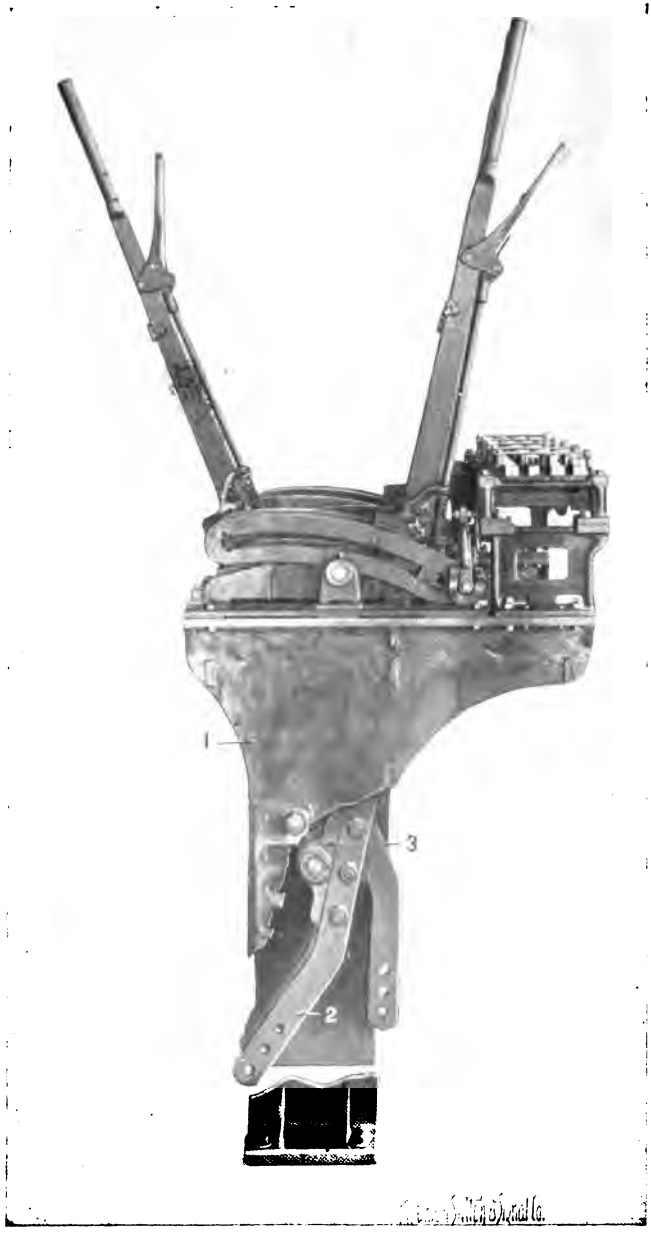

Fig. 14.

SAXBY AND FARMER MACHINE HORIZONTAL LEADOUT.

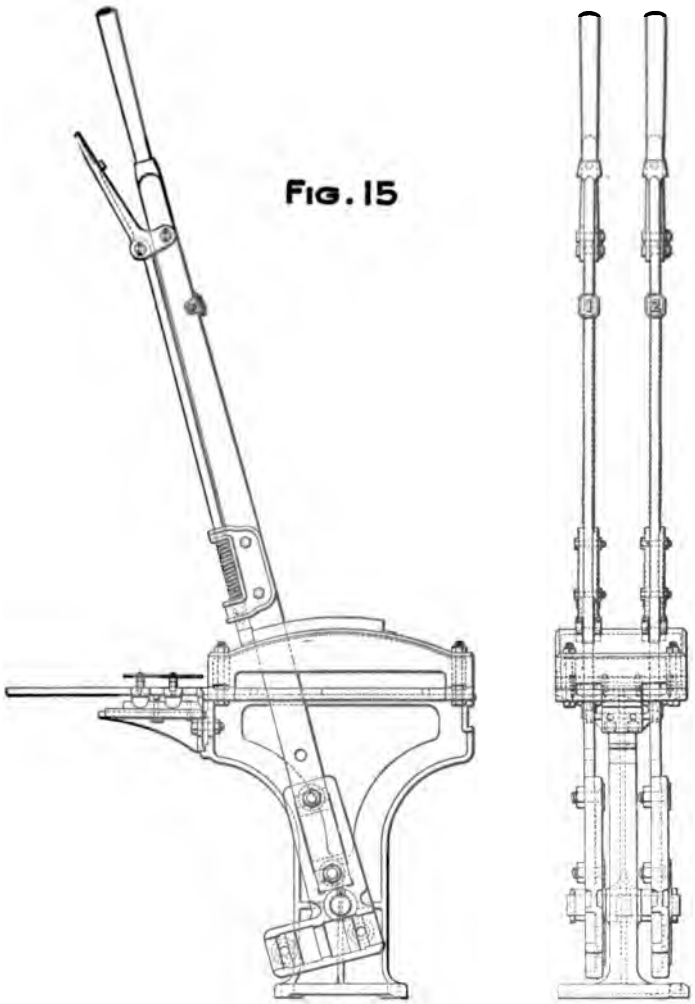

STYLE "C" INTERLOCKING MACHINE

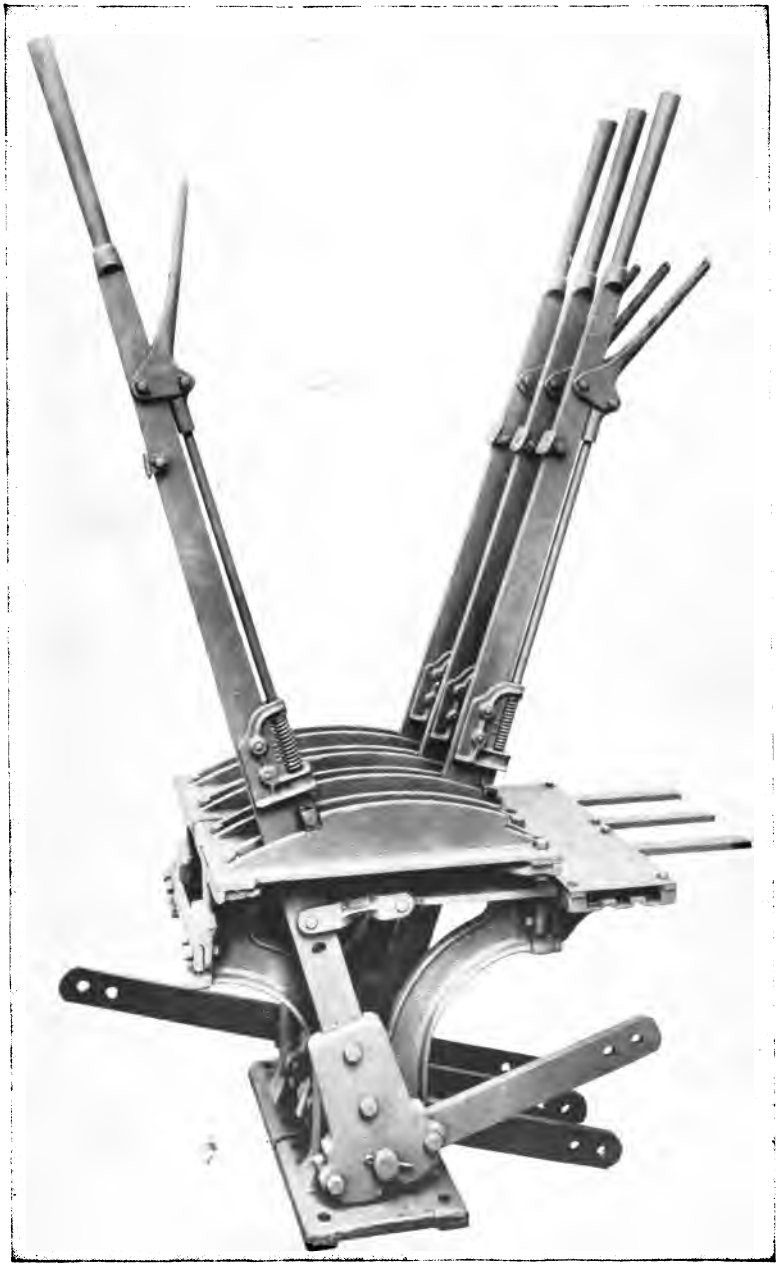

Fig. 16.
STEVENS INTERLOCKING MACHINE.

Fig. 17.
DWARF INTERLOCKING MACHINE.

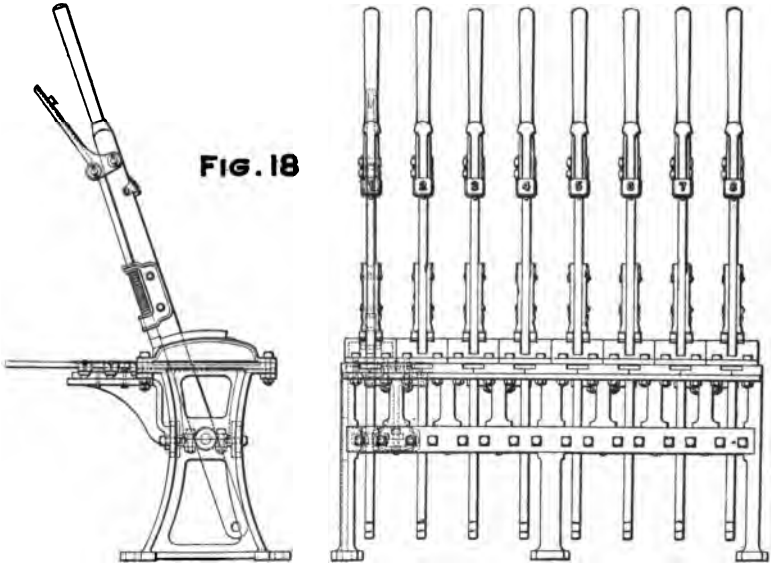

STYLE "D" DWARF INTERLOCKING MACHINE

tween the rocker and tappet having only a vertical motion. This machine is built in sections which will receive either four or eight levers.

The locking dogs, etc., used in this machine are similar to those used in the National Machine (Fig. 12), and to those used in the back locking of the Style "A" machine (Fig. 4).

Preliminary latch locking is a feature of this machine.

Saxby & Farmer Interlocking Machine. Horizontal Leadout.

Machines of the design shown in Fig. 14 are adapted for use on the ground floor of buildings and on the deck level of drawbridges, the connections leading horizontally from the levers to the track.

The material used for its construction is the same as that used for the Saxby & Farmer machine, shown in Fig. 1, with the exception of the leg 1, the lever 2 and the lever shoe 3.

Style "C" Interlocking Machine.

The Style "C" interlocking machine is illustrated in Fig. 15. It is designed for the purpose of controlling a small number of switches and signals at points where the space for installing a machine is limited or where it is found advantageous to control a number of yard switches from a central point. Style "C" machines are built to contain 2, 4, 6, 8, 10 or 12 levers.

It is often desirable to install this type of machine at locations where it is necessary to temporarily interlock a few switches, signals, etc., as they are comparatively inexpensive and can be moved from point to point, assembled. They can be operated on the ground level with horizontal connections, or they can be set on a platform and be vertically connected.

This type of machine is constructed without preliminary latch locking.

On account of the design of this machine only comparatively simple locking can be arranged for. It is, therefore, inadvisable to install this type when a machine of more than twelve levers is required.

Stevens Interlocking Machine.

The Stevens Interlocking Machine, shown in Fig. 16, is very similar in design to the Style "C" machine (Fig. 15), and is adapted for use under the same conditions. It is designed to receive 2, 4, 6 or 8 levers.

Dwarf Interlocking Machine.

Fig. 17 illustrates what is known as the Dwarf Interlocking Machine.

Dwarf machines are adapted for use at outlying switches and on elevated railroads, where they may be set on ties or on low platforms at track level. They can also be used in place of the Stevens or Style "C" machine, excepting where a vertical leadout is necessary.

A dwarf machine may be constructed of any number of levers from 1 to 8, inclusive, but it is not advisable to use a machine of this type where more than eight levers are required, as only a comparatively small quantity of locking can be satisfactorily introduced into these machines.

The dwarf machine is constructed without preliminary latch locking.

Dwarf Interlocking Machine, Style "D."

Another type of dwarf machine, known as the Style "D," is illustrated in Fig. 18. This machine conforms in general design to the dwarf machine shown in Fig. 17, and may be employed under similar conditions.

Electric and Electro-Pneumatic Interlocking Machines.

The Union Switch & Signal Co. constructs two power machines which, in general appearance, are simi-

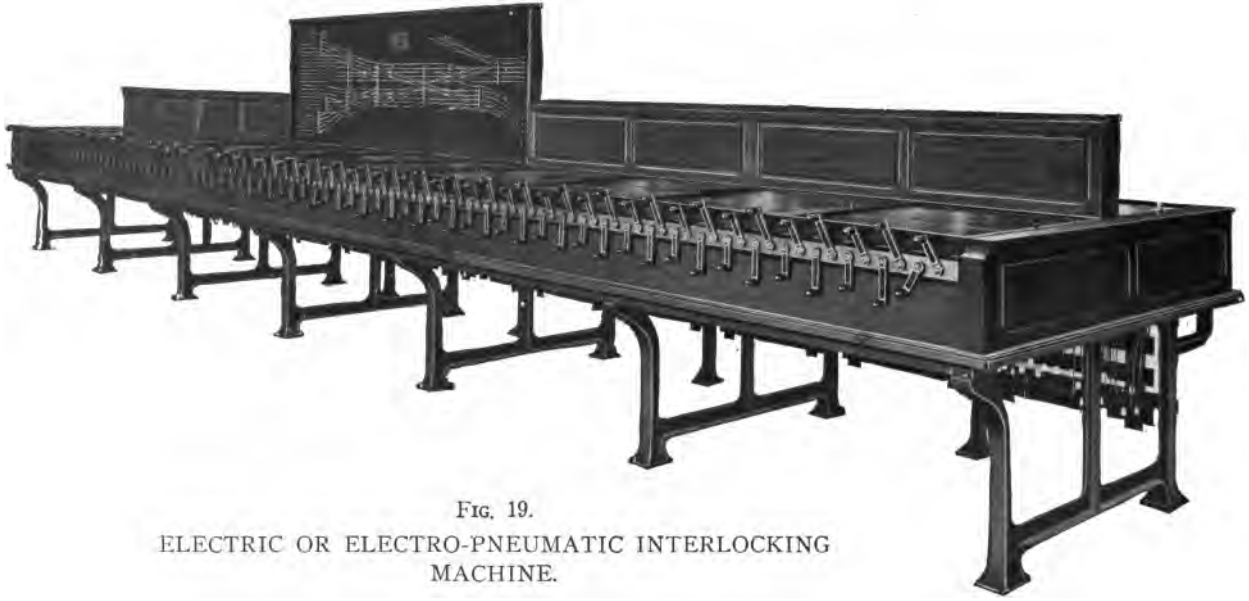

Fig. 19.
ELECTRIC OR ELECTRO-PNEUMATIC INTERLOCKING MACHINE.

Fig. 20.
ELECTRIC INTERLOCKING MACHINE.

Fig. 21.
ELECTRIC INTERLOCKING MACHINE.

lar to each other. An illustration is given in Fig. 19. One of these machines is used to control the functions of an electro-pneumatic interlocking plant and the other the functions of an electric interlocking plant.

The locking used in connection with these machines is a dwarf type of the Saxby & Farmer mechanical locking illustrated in Fig. 9.

The power interlocking machine illustrated in Fig. 20, which is manufactured by The Federal Railway Signal Company, is a miniature type of the Saxby & Farmer mechanical machine and is employed to control the functions of an electric interlocking plant. The locking used in connection with this machine is also a dwarf type of the Saxby & Farmer locking shown in Fig. 9.

The power interlocking machine illustrated in Fig. 21 is constructed by the General Railway Signal Company and is used to control the functions of an electric interlocking plant. The locking used in connection with this machine is similar in design to the Style "A" locking illustrated in Fig. 11, but of reduced size.

CHAPTER IV.

LOCKING.

Having described the various types of interlocking machines in common use for the operation of an assemblage of interlocked switch, lock and signal devices constituting an interlocking plant, we will consider in this chapter the precedence and relation of the movement of these parts as controlled by the locking. This will be done by studying various plans of track and signal layouts which, while not necessarily representing actual situations, are typical of conditions commonly met in practice.

In designing the locking for any given plant it is customary to prepare first, a plan showing the location of the various tracks, switches and signals with the normal position of each indicated thereon together with the location of detector bars. (See Fig. 23.) Such plans also show the numbers of the levers in the interlocking machine which are assigned for the operation of the various units or functions. Unless otherwise specified, interlocking plans show the position of the functions with the levers in the machine standing in their normal position; for instance, when a switch is shown in a certain position on such plans, it is said to be normal; if the lever operating this switch is thrown to its other position, it is said to be reversed. After the signaled and numbered track plan above noted is prepared, a locking sheet is made (see Fig. 23), which is a table showing in numerical order the levers in the machine together with the relation between the movement of each lever and any other levers in the machine affecting, or affected by, its

movement. Brief explanations will be given regarding the uses of interlocking apparatus and of the method of signaling each track layout included herein, in connection with making locking sheets. With the locking sheet as a guide, a diagram commonly known as a "Dog Chart" (see Fig. 23) is designed. This is used as a construction plan for the manufacture of the locking to be placed in the machine.

Symbols for interlocking apparatus, as they are shown on interlocking plans, are illustrated in Figure 22 and are described below:

No. 1 shows a detector bar, previously described, located at a derailing switch, commonly called a derail and used for the purpose of derailing a train which has disregarded a stop signal, thus preventing its movement to a point where it might strike another train or conflict with other train movements. Detector bars are also used to protect grade crossings. For this purpose the bars are located on each track as near as possible to the crossing frogs. If any part of a train remains on the bars—here called crossing bars—the levers operating the bars cannot be thrown and are so interlocked with the other levers in the machine that it is impossible to set up an opposing route until the wheels of the train moving over the crossing have cleared the bars. Track circuits are frequently installed at crossings in place of detector bars.

No. 2 represents a derail open and a derail closed. The light arrows used on this and other sketches under Figure 22 to denote the route which is set up for a given train movement are not shown on interlocking plans, being used on these sketches to explain the black triangles which are the customary symbols for denoting the positions of switches and derails.

No. 3 shows two positions of a switch, one set for the straight route and one for the diverging route. As a rule, switches are normally set for the principal route.

No. 4 shows the various positions of a double slip and

the two positions of the movable point frogs used in connection with it. These positions are governed by the same rules as those controlling the switch.

No. 5 shows double slips similar to those shown in No. 4, with the exception of rigid frogs being used instead of movable point frogs.

No. 6 shows the various positions of a two-arm home signal. The first, or normal, position indicating that all trains must stop until one of the arms clears or some other kind of an order or signal to proceed is given. The second position indicates "Proceed; high speed route," and the third position indicates "Proceed; diverging or low speed route."

No. 7 illustrates what is known as a distant signal. When an engineman approaches this signal and finds it in the first position, he proceeds without stopping, but prepared to stop at the home signal. If the arm is in the second position, it indicates that the home signal or signals controlling it is, or are, in the clear position for the high speed movement. The clear position of the distant signal is used only to indicate that the high speed route is clear and, therefore, it can be cleared only when the high speed arm or arms of the home signal or signals in advance is, or are, clear.

No. 8 illustrates a one-arm bracket pole, or bracket mast, which is used where, owing to a lack of clearance, it is impossible to locate a straight pole between tracks "A" and "B," to govern movements on track "B."

No. 9 shows first, the "Stop" position and second, the "Clear" position of the dwarf signal. This type of signal is used to govern reverse, i. e., back-up movements on main tracks, or movements to or from sidings, and frequently, in place of high signals, for main tracks, in terminals and yards.

The interlocking plan illustrated in Figure 23 shows a single track layout, with one siding turnout. A derail is placed at the fouling point on the siding to prevent a

Fig.22

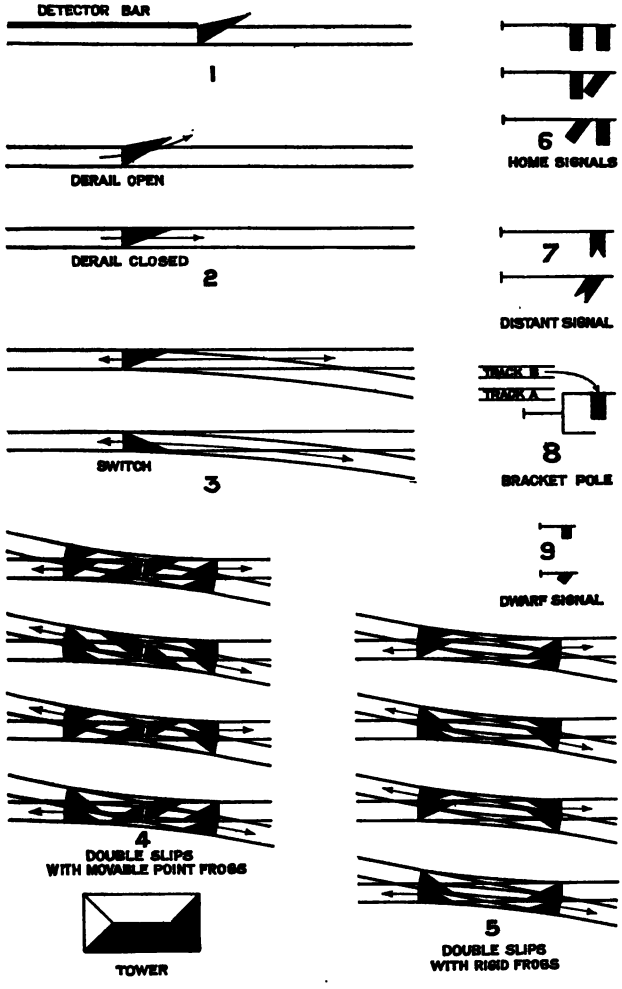

SYMBOLS FOR INTERLOCKING PLANS

train moving from the siding and colliding with a train on the main line. No derail is located in the main track opposite derail 5, which is the fouling point of the siding and main track, as the protection afforded by so placing a derail would be offset by the danger of derailment of high speed trains. It is usual to place derails in the main track only at such points as drawbridges and grade crossings.

There are two methods of mechanically operating and locking switches, derails, etc., which affect the locking in the machine. With one method, one lever operates and locks the switch and also throws the detector bar; this is known as the switch and lock movement. Where the other method is employed, the switch is operated by one lever and the throwing of the detector bar and locking of the switch is performed by another lever; this is known as a facing point lock. The facing point lock arrangement, although it takes one more lever, is by far the better and is used by the majority of railroads. It is obvious that if a connection to a switch and lock movement breaks, the signalman may not know it and the switch controlled may stand half way open; whereas, with a facing point lock, the switch must be entirely thrown in one direction or the other before the signalman can operate the lever which throws the detector bar and locks the switch, which lever it is necessary for him to reverse before he can give a clear signal for a train to proceed over the switch.

The derail and the switch (Fig. 23) are operated by one lever, 5. A dwarf signal, 3, is located approximately fifty-five feet back of the derail to control movements of trains from the siding. Home signal 2, which is located at the fouling point of the two tracks, protects movements over switch 5. It is placed so as to allow of a movement to or from the siding while a train is standing at (in the rear of) it. No. 1 is a distant signal for home signal 2 and is located a sufficient distance in the

rear of it to enable an engineman to get his train under control before he reaches the home signal, which he expects to find at "Stop," if the distant signal indicated "Caution" when he passed it. Levers 6 and 7 control a two-arm home signal, which is located about fifty-five feet back of the switch point, lever 7 operating the top arm which controls movements on the main line, and lever 6 operating the lower arm for movements from the main track to the siding. No. 8 is the distant signal for home signal 7.

The different functions are so connected that when the signalman is operating levers at one end of the machine, the signals, etc., operated will be located at the corresponding end of the interlocking plant.

The heavy black line in the tower designates the position of the machine and the dot represents the signalman. These positions must be located before a person can proceed to allot numbers to the levers controlling the various functions. A standard method of numbering is used throughout this work. Many railroads differ in regard to this point.

When numbering a signaled layout such as is shown in Fig. 23, it is the practice to first number the high signals, then the dwarf signals, for movements in one direction; then the spare spaces or levers, if any; then the switches, derails and facing point locks; then more spare spaces or levers; and, finally, the signals for movements in the opposite direction.

In Fig. 23 is shown locking sheet "A," for the interlocking plant illustrated in the same figure. Before proceeding to make this locking sheet, the routing of the various signals should be determined. As before noted, when an engineman passes a clear distant signal it indicates a clear route through the interlocking; therefore, the reversing of lever 1 controlling the distant signal should lock home signal lever 2 reversed and 2 reversed should lock switch and derail lever 5 normal, so that

switch 5 and home signal 2 will be in their correct positions for a through movement from distant signal 1. Home signal lever 2 reversed also locks home signal lever 7 normal to prevent the clearing of two conflicting home signals, 2 and 7, at the same time. Dwarf signal lever 3 reversed locks switch and derail lever 5 reversed, as the derail should be closed and the switch reversed before a train is allowed to proceed over them. Dwarf signal 3 reversed also locks home signal lever 6 normal to prevent dwarf signal 3 and home signal 6, both being in the clear position at the same time. With all signals standing normal, lever 5 may stand normal or reversed, the position of switch and derail controlled by that lever being, under these conditions, immaterial. It is apparent that if any of the signals are in the clear position, it would be impossible to reverse lever 5, as it would be locked in one position or the other by the signal lever being reversed. Home signal lever 6 reversed locks 5 reversed so that switch and derail controlled by lever 5 will be in the correct position for a movement from the main line to the siding. Home signal lever 7 reversed locks switch and derail lever 5 normal, so that derail will be open and switch will be in the correct position for a movement on the main line. Lever 8 reversed, controlling distant signal, locks lever 7 reversed, which lever controls high speed arm of two-arm home signal, so that when distant signal 8 is in the clear position, derail 5 will be open, switch 5 will be set for the main line and home signal 7 will be in the clear position, thereby setting up a clear route from the distant signal 8 through the interlocking. If a train is making a movement on the main line, another train cannot leave the siding, as 5 would be locked normal by 2 or 7 being reversed, making it impossible for the signalman to reverse lever 3 as this lever cannot be reversed unless 5 is reversed. Again, if a train is making a movement to or from the siding, it is impossible to reverse lever 2 and give a clear

home signal, as this lever calls for 5 to be in the normal position and lever 5 would necessarily have to be reversed if a movement were being made to or from the siding.

The locking sheet shows that 2 reversed locks 7 normal, which is the same as 7 reversed locking 2 normal (see dog chart, Fig. 23, No. 2). This condition prevails in all cases where one lever reversed locks another lever normal, the first lever to be reversed locking the other lever in the normal position.

Locking sheets should be compiled by one person and checked by another, but if it is necessary for the same person to both make and check a locking sheet, the following procedure will give satisfactory results: first make the locking sheet in the regular way, then start with the last lever in the machine and make the locking sheet backward. Fig. 23, A-B, shows this method.

In Fig. 23 are illustrated four dog charts, two being of the Style "A" and two of the Saxby & Farmer type. They are all made from the locking sheet "A." Sketches "C" and "D" illustrate the forms upon which dog charts are laid out.

Before proceeding to make a dog chart it is necessary to study the locking sheet in order to ascertain whether any two or more levers lock any other lever or levers in certain positions, as in the case of 2 and 7 reversed locking 5 normal. (Dog chart No. 1 shows the correct way of laying out this locking, and dog chart No. 2 the incorrect way, although the same results are accomplished by both.) This is also true for levers 3 reversed and 6 reversed locking 5 reversed, but it is inadvisable to follow the above method in this particular case, as the butt would have to be placed between dogs on either side of tappet 5, as shown dotted, in the 4th space, chart 1, and this would leave a very short piece of bar on the double dog to the right of tappet 5, which would be likely to twist to one side and make the butt ineffective. Of course, if cramped for space in a machine, the short bar referred

to can be extended to the right and a guide dog fastened to its end, which construction would make this arrangement satisfactory.

Charts Nos. 1 and 3 show the proper method of laying out this locking, and Nos. 2 and 4 an improper method. The results obtained in each case are similar, in that the levers would be correctly interlocked with one another, but the number of bars and dogs used in scheme No. 2 would be greater than necessary and, in the case of the Saxby & Farmer charts, the number of dogs and cross locks would necessarily be greater if the locking were laid out as shown in scheme No. 4 instead of using the method employed in scheme No. 3.

In small machines, this saving of space and dogs is not a great factor, but when machines are composed of twenty-four or more levers, it becomes an important point, eliminating superfluous locking, and reducing the cost and labor of construction.

There is really no one method of procedure superior to others in laying out dog charts for small machines, except in the case of the Style "A" it is customary to first use space 1, then 2, etc.

In the Saxby & Farmer machine space is provided for one more locking bracket than would equal the number of levers in the machine, for instance, an eight lever machine has spaces for nine brackets, although five are usually sufficient. These are spaced as shown on dog chart No. 3, which arrangement allows additional brackets to be added at almost any point in the machine, thereby simplifying any changes that may be necessary after the machine has been constructed.

Another point to take into consideration when laying out Saxby & Farmer charts, especially in small machines, is the advisability of keeping apart the bars operated by levers which lock one another, to avoid having short cross locks. A case of this kind is shown in scheme No. 4, where 6 reversed locks 5 reversed, although there is

space, in this particular instance, to extend the cross lock as shown by dotted lines.

A spare locking bracket is placed in the Saxby & Farmer chart No. 3, between levers 6 and 7. This is provided to take care of future changes in the locking, although additional brackets may be added at any time. In large machines an additional spare bracket is usually allowed for each eight levers.

Interlocking plan shown in Fig. 24 differs from that illustrated in Fig. 23, only to the extent of an additional siding connecting with the main line. The signaling necessary to cover this addition is worked out on the same basis as the scheme employed for the single turnout, with the exception of the facing point locks, which have been substituted for switch and lock movements. It is necessary, with this arrangement of track, to make the home signal 2-3 a two-arm signal, the top arm 2 governing the movements on the main line, over switches 8 and 10 normal, and the lower arm 3 controlling movements of trains to the siding, over 8 normal and 10 reversed.

Particular notice should be taken of the method of numbering the facing point locks, derails and switches. First is facing point lock 7, locking derail 8; then facing point lock 9, locking switches 8 and 10; and, finally, facing point lock 11, locking derail 10. This arrangement of levers insures a good run of the connections operating the facing point locks, switches and derails. It also brings next to one another the levers which are to be operated consecutively; for instance, when a signalman throws switch 8 or 10, he must then throw facing point lock lever 9, to lock it. Furthermore, it simplifies, to a certain extent, the locking as it is arranged on the dog chart.

As shown on the plan, derail and switch 8 are operated by one lever, as it is always necessary to have both either normal or reversed at the same time. Lever 10, controlling switch and derail, is a similar instance.

It is possible, but inadvisable, to operate either 7 and 9, or 9 and 11, with one lever, as it is always necessary to use 9 when 7 or 11 is being used. With the arrangement as shown it is impossible to reverse 7 unless 8 is reversed; this is also the case with 11 and 10; therefore, if 7 and 9 were operated by one lever, it would be necessary to lock both the derail and switch 8 in their normal and reversed positions, with this lever, which would mean that if the signalman started to reverse switch and derail 8, preparatory to clearing the signal for a movement from the siding to the main track, and the connections between the lever and derail broke before the derail had started to move, he might not know that the breakage had occurred and, therefore, reverse lever 8 and leave the derail open or normal. He could then reverse 7, which would allow him to clear signal 4, the train proceeding and being derailed.

One spare space 5, and two spare levers 6 and 12, have been provided to take care of future changes. As previously stated, the number of these and whether they are spare spaces or levers, is generally governed by local conditions.

Such points in the locking sheet shown in Fig. 24 as differ from locking sheet in Fig. 23 will be explained.

Lever 2 reversed locks 8 and 10 normal; it also locks 9 reversed, which in its turn locks 8 and 10 in their normal and reversed positions, both in the locking in the machine and on the ground. Lever 3 reversed does not lock 10 reversed direct, owing to 10 being locked reversed by 11 reversed, which in its turn is locked by 3 reversed. Lever 4 reversed locks 7 reversed, which in its turn locks 8 reversed; therefore, it is not necessary for 4 reversed to lock 8 reversed direct, as it does this indirectly by locking 7 reversed.

As it is possible to make a movement from signal 4 to either the main or opposite siding, a special condition arises in connection with the locking. It is evident that

the only time that 11 should be reversed is when a movement is to be made over 10 reversed; therefore the locking would read, "4 reversed when 10 is reversed locks 11 reversed." (See dog chart, which illustrates this and also shows that 11 would remain unlocked with 4 reversed if 10 were normal.)

When making dog charts it is not the practice to indicate in full the tappet pieces (numbers 9A to 12 inclusive, Fig. 10), as the front dogs used in connection with them indicate which tappet pieces are employed.

The special on lever 13 in connection with levers 7 and 8, is similar to the special on lever 4 and is, therefore, covered by the same explanation.

Lever 14 reversed does not lock 8 reversed direct, owing to 8 being locked reversed by 7 reversed, which is locked reversed by 14 reversed. If the locking sheet had shown 14 reversed locking 8 reversed, it would have been called an over-lock, which means a duplication of locking already accomplished.

The Style "A" and Saxby & Farmer dog charts shown are to cover the locking sheet illustrated in this figure.

It will be noticed that in the Style "A" chart, levers 2, 3, 4, 13, 14 and 15 lock 9 reversed, using only one bar. When combinations of this description are possible they simplify the locking by eliminating a number of dogs and bars that otherwise would be necessary.

If one lever reversed locks another lever normal and reversed, as in the case of 9 reversed locking 8 normal and reversed, the locking should be arranged as shown in the dog chart and not separated, as shown in Fig. "A," as the latter arrangement would make it impossible to reverse 9 whether 8 was normal or reversed.

Regarding the arrangement of back locking in the third space of Style "A" chart, it will be seen that 2 reversed locks 8 and 10 normal. The bar then butts against the top bar to the right of it, consequently holding the dog in the notch of tappet 15 and thereby locking it normal.

Furthermore, when 15 is reversed it locks 10 and 8 normal, as the first and second bars are both fastened to the same dog.

The combinations of locking used in making the Saxby & Farmer dog chart as shown are considerably different from those found to give the best results with the Style "A," this being due to the entirely different construction of the locking.

When preparing to lay out a Saxby & Farmer dog chart for the locking sheet shown in the figure, the best method of procedure, after studying the locking sheet for possible combinations, is to first lay out the locking for the levers on which specials occur. Reference to the locking sheet will show that lever 4 reversed when 10 is reversed locks 11 reversed. Therefore it is advisable to place the driver operated by lever 4 on one of the bars near the top of the chart; next in order should come driver for lever 10; then for 11. After the drivers have been located for levers 4 and 13, the special locking for these levers should be laid out. This will then give an idea of where the balance of the drivers should be located to give the best results.

Fig. 25 shows the signaling necessary for a single track grade crossing. The derails are usually placed about five hundred feet from the crossing in order to prevent a derailed train from fouling the crossing track. This plan also illustrates the use of crossing bars, four of these, fifty feet long, being necessary for this particular crossing, although where the angle of the crossing is acute, four twenty-five foot bars, operated by one lever, would be satisfactory. These should be placed as shown in sketch "A." If a train was traveling over the crossing the car wheels would be above the bars until the last car had passed and, consequently, the bars could not be thrown. It is apparent, from sketch "B," that twenty-five foot bars could not be used on a right angle crossing, as the wheels of a car could stand on the crossing

as shown, thereby allowing the bars to be thrown under the car.

The special points relative to this locking will be next taken into consideration.

It is apparent that when the derails on one track are closed the derails on the crossing track should be locked in their normal or open position. This is accomplished by the following means: 7 reversed locks 8 reversed, which, in its turn, locks 9 normal. It is, therefore, clear that 7 cannot be reversed unless 9 is in the normal position, in which case it is impossible to reverse 11, as 11 reversed locks 9 reversed. If crossing bars had not been employed, 7 reversed would have locked 11 normal, which would accomplish the same results as are obtained by the derails locking one another through the medium of the crossing bar levers.

It is obvious, from the above explanation, that when a route is set up the crossing bars must be in the reversed position. Should a train make a movement over the crossing and, accidentally or otherwise, leave a car fouling the crossing track, the car would stand on the crossing bars and make it impossible to throw them to their normal positions. Assuming these bars to be those controlled by lever 8, it is clear that 9 could not be reversed while 8 was reversed; therefore, it would be impossible to reverse 11 and set up a conflicting route, as 11 reversed locks 9 reversed.

If instead of the layout being as shown, an acute angle crossing is installed and the four crossing bars are operated by one lever, as explained above, and assuming this lever to be No. 8, then either of two methods may be employed to interlock them with the derails and signals.

Where the first method is used, 7 reversed should lock 8 normal, and 11 reversed should lock 8 reversed, making it impossible for the operator to reverse 7 while 8 is reversed or to reverse 11 unless 8 is normal. This accomplishes the same results as the locking shown.

With the second method, 8 reversed locks 7 and 11 in their normal and reversed positions, and the home signals 2, 4, 13 and 15 lock 8 reversed. Therefore, before the signalman can clear signal 2, he must first reverse 7, then 8 and 6, and then 2, giving an engineman a clear signal through the interlocking. It is apparent that as 8 reversed locks all the derail levers in their normal and reversed positions, it is impossible to reverse or close derails 11 until home signal 2 is returned to its normal or danger position thereby allowing 8 and 7 to be returned to their normal positions, which unlocks derails 11 and allows them to be closed. That the derails on both tracks may not be closed at the same time, this method requires that when the derails on one track are reversed they shall lock in their normal positions the derails on the crossing track.

In Fig. 26 is illustrated a layout of tracks necessitating an arrangement of signaling somewhat different from any yet shown. All the derails for high speed movements are placed at approximately the same distance as those shown for the single track grade crossing. Dwarf signals 6 and 19, which govern reverse movements on the main line, have derails placed fifty-five feet ahead of them and about three hundred feet from the crossing, this distance being great enough to prevent a train, making a reverse movement which is necessarily slow, from fouling the crossing track, if derailed.

It would be possible, though inadvisable, to control derails 9 and 13 with one lever, if so controlled they both would necessarily have to be either in the normal or reversed position at the same time. Consequently, if a train was making a movement from signal 5 to the main line, both derails on the main line would have to be closed. This condition would be unsatisfactory, as a train would then be able to pass signal 4 at danger and collide with a train coming from the siding.

Lever 12 operates a facing point lock which locks

both a derail and a switch. This differs from the case cited in connection with Fig. 24, in that the derail must be closed whenever a movement is made over either position of the switch. Therefore the derail is only locked reversed by the facing point lock 12.

This locking sheet develops some new features in locking. For instance, in addition to 9 reversed locking 15 and 17 normal to prevent conflicting routes being set up, it also locks 11 normal which insures either one of the two derails 9 and 11 being locked in the normal position when the other is reversed. This makes it impossible for a train to leave the siding while a movement is being made on the main line, or vice versa.

The locking just explained is known as switch locking, which literally means locking between switches, derails being classed under this heading.

Lever 4 reversed locks 8 reversed and 8 reversed locks 9 reversed which, in its turn, locks 11 normal; 4 reversed also locks 12 reversed, which locks 13 reversed; therefore, although 4 reversed locks only 8 reversed and 12 reversed direct, it locks through them 9, 11, 13, 15 and 17 in their correct positions for a movement from signal 4.

The locking on lever 5 is similar to that on lever 4.

Fig. 27 illustrates a track layout which will complete the study of grade crossing interlocking.

All derails are placed at the standard distance from the crossing with the exception of derail 23, which is located as shown as it is impossible to bring it nearer to the crossing.

This arrangement is peculiar from a signaling standpoint since it is necessary to operate each of the detector bars and derails with a separate lever to secure the best protection. For instance, derails 13 and 22 cannot be operated with one lever, as to make a movement from signal 30 over 20 reversed, necessitates closing 22; if both derails were controlled by one lever, 13 would be

closed during this movement; and, should a train run past signal 7 at danger under these circumstances, it would probably result in a collision. Derails 17 and 14, and 11 and 23, with switch 16 intervening, are similar instances.

The two ends of the transfer track are operated by lever 16 as they must both be either normal or reversed at the same time. It is advisable to control the detector bars with separate levers, in order to avoid locking any of the derails in both their normal and reversed positions, as explained in connection with Fig. 26.

The switch locking entails some special features which have not heretofore arisen. For instance, 13 reversed locks 20 normal, which is necessary to prevent a train from using 20 reversed when a movement past signal 7 is being made; 13 reversed also locks 14 normal when 16 is normal, as when 16 is reversed two movements may be made at the same time, viz.: the first over 13 reversed, 20 normal and 22 reversed; and the second over 14 reversed, 16 reversed and 20 normal.

It is essential that 22 reversed should lock 17 normal as they both should not be closed at the same time; 22 reversed also locks 14 normal when 16 is normal; for instance, if 20 and 16 are normal and 22 reversed, then 14 should be locked normal; again, if 20 is reversed, 22 reversed and 16 normal, then 14 should still remain locked normal; but if 16 is reversed when 22 is reversed, 14 should be free to operate as it would then be possible to make a movement over 14 reversed, 16 reversed and 20 normal, while a train was passing over 22 reversed, 20 normal and 13 reversed; or with 14 and 22 reversed a movement could be made over 16 and 20 reversed. It is apparent from the above that in whichever position 20 may be with 22 reversed, as long as 16 is normal 14 should remain locked normal; therefore, the locking reads, "22 reversed when 16 is normal locks 14 normal."

Further reference to the locking sheet will show that although 2 reversed does not lock 11, 14, 16, 17, 20 or

23 direct, it locks them indirectly, through 10 reversed and 24 reversed.

Six is the signal for the transfer track; therefore, it locks 16 reversed and 27 and 30 normal, as neither of the latter two signals can be used when 6 is reversed. As a movement can be made from 6 over 20 normal or reversed, special locking is introduced on this lever as shown on locking sheet. It is obvious that 24 should be locked reversed only when 20 is normal, and 21 should be locked reversed only when 20 is reversed; therefore, 6 reversed when 20 is normal locks 24 reversed, and 6 reversed when 20 is reversed locks 21 reversed. Although 20 is apparently not locked by 6 reversed, it is locked in both positions by 19 reversed, which in turn is locked reversed by 6 reversed.

Specials on 27 and 30 are similar, as both of these signals are for movements over 16 normal or reversed. This special locking is covered by explanations given above.

The Style "A" and Saxby & Farmer dog charts illustrate, to good advantage, methods of combining locking.

In space 2-F of the Style "A" chart, levers 13, 22 and 23 reversed lock 17 normal and also 14 normal when 16 is normal. In space 3-F, 30 and 27 reversed lock 19 reversed and also 10 reversed when 16 is normal, and 15 reversed when 16 is reversed. The remainder of the locking on 30 is combined with that on 3, in space 2-B. This is also the case with 2 and 27, in 3-B.

In making a Style "A" dog chart of this size, the special locking should first be laid out; next the locking on the signal levers; and, finally, the locking on the levers controlling switches, facing point locks, etc.

When laying out the Saxby & Farmer dog chart for this locking sheet, the drivers should be located for the levers on which special locking occurs; for instance, in the case of lever 6, the driver is located on bar 2; then following in order come 15 on bar 6, 16 on bar 9, 19 on bar 12, 20 on bar 16, 24 on bar 21, 21 on bar 22, 27 on

bar 26, and, finally, 30 on bar 30. Drivers for 27 and 30 are not located in the order given on the locking sheet as, to secure somewhat better results, it is advisable to locate them as shown.

When all the drivers have been located for the levers on which special locking occurs, and the locking controlled by these levers has been laid out, the balance of the drivers and locking can be easily arranged. One special instance occurs in the locking in bracket located between levers 14 and 15, where 6 reversed locks 24 reversed and 27 normal when 20 is normal. This shows that instead of 27 being locked normal by 6 reversed direct, as indicated on the locking sheet, it is locked normal by 6 reversed only when 20 is normal. Reference to the interlocking plan shows that 27 cannot be reversed unless 20 is normal; therefore, 6 need only lock 27 when 20 is in this position. The above is shown on the dog chart in this manner to avoid using an additional cross-lock which would be necessary if 6 reversed locked 27 normal direct, as it could not then be combined with 6 reversed locking 24 reversed when 20 is normal.

The combinations of locking in this machine are quite similar to those in Style "A."

Three spare brackets are provided for future changes.

The dogs are numbered to correspond to the numbers of the drivers which operate the bars to which the dogs are riveted. While this greatly simplifies the reading of a large dog chart, it is not the practice to so number the dogs, except in machines of fifty-six or more levers, and is shown in the figure only to illustrate the method employed.

Where a number of spare spaces or levers are provided in a machine, it is advisable to leave at least an equal number of vacant spaces in which longitudinal locking bars can be located. In the Saxby & Farmer dog chart illustrated in the figure, five spaces are provided, Nos. 20, 23, 25, 28 and 29, these being indicated by light lines.

The interlocking plan illustrated in Fig. 28 requires some explanation to make clear the reason for signaling it as shown.

Two home signals, 2 and 3, are used to control movements on the main line. It would not be advisable to eliminate home signals 3-4 as this would necessitate signal 2 controlling movements over switch 10, which is located about six hundred feet in advance of signal 2. It is not thought advisable to control a facing switch by a signal located at so great a distance, as with this type of interlocking, where no track circuits are used, it would be possible to reverse the switch after a train had passed signal 2. Another point worthy of consideration is the fact that if the track to the right of signal 3-4 is occupied, then instead of holding a train at signal 2 or 5, it can be allowed to proceed to signal 3-4. Also a train moving from the siding over switch 10 reversed to the main line will not, with the signals so arranged, have to proceed further than signal 3-4 to receive "Proceed" indication for a direct movement on the main line.

Lever 1 reversed locks 2 reversed and 3 reversed; therefore when the distant signal shows clear it indicates that the through high speed route is set up.

It is necessary for 2 reversed, and 5 reversed when 8 is reversed, to lock 13 and 14 normal in order to prevent movements being made at the same time from 2 or 5 to 3-4 and from 13 or 14 to 12, in which event two trains would probably meet between signals 12 and 3-4.

It is necessary for 3 reversed to lock 13 normal and 4 reversed to lock 14 normal, in addition to 2 reversed, and 5 reversed when 8 is reversed, locking 13 and 14 normal, as it is possible for 2 and 5 to be at "Danger" when 3 or 4 is "Clear."

Fig. 29 shows a two to four track layout, 1 and 4 being the local tracks and 2 and 3 the express tracks.

It is necessary to use a four-arm bracket pole to carry signals 15-16 and 18-19 owing to the clearance between

tracks 1 and 2 being insufficient to place therein a straight pole to carry signal 15-16.

Although there are six switches which are locked by facing point locks, only two levers are necessary to control these locks, 6 operating the two bars on the upper track and 7 the two bars on the lower track. Some engineers are of the opinion that with the arrangement shown one lever should be allowed for the operation of each bar. The former method simplifies the locking somewhat, while the latter arrangement facilitates the operation to a certain extent. For instance, if a movement was to be made over 7 reversed and 9 and 11 normal, then these switches only would be locked; whereas, with the former method, 10 also would be locked in either its normal or reversed position thereby preventing the signalman from operating 10 preparatory to setting up another route. It therefore becomes merely a question of whether the additional expense incurred by the use of four levers in place of two is counteracted by the added facility of operation.

The routing for the various signals is as follows: signal 2 governs movements on the express track over 11 normal; signal 3 is for all other movements. A three-arm signal is sometimes used in place of 2-3, the top arm routing to the express track, the middle arm to the local and the lower arm for all other movements. This arrangement enables the engineman to more clearly understand upon which track he is to run, although when a number of arms are placed on one pole they are likely to prove confusing. The former method is the one more generally used.

Signal 4 is routed to all tracks including the run around movement over 7 reversed and 9 reversed. Signal 19 governs over 10 reversed and 9 and 7 normal. Signal 18 governs over 10 and 9 reversed and 7 normal, or a run around over 10, 9 and 7 reversed. Signal 16 is routed over 10, 9 and 7 normal. Signal 15 is for a

movement over 10 normal, 9 reversed and 7 normal, or 10 normal and 9 and 7 reversed.

Special attention should be given to the locking on lever 3 which, when reversed, locks 7 normal, 8 reversed and 13, 15 and 18 normal. Reference to the routing given above will show that 18 and 15 are for movements over 9 reversed and 13 is routed over 11 reversed and 9 normal. It is therefore, apparent that none of these signals should be cleared when 3 is reversed, which explains why 3 reversed locks them direct as shown in the locking sheet; 4 reversed locking signals 15, 16, 18 and 19 is another instance.

It is not necessary to have a special, reading "4 reversed when 7 and 9 are reversed locks 6 reversed," as 4 reversed locks 6 reversed direct.

With 10 reversed and 9 normal, 7 should be locked normal to prevent a movement from track 3 or 4 to track 2 over 7 reversed. The locking therefore reads, 10 reversed, when 9 is normal, locks 7 normal.

Fig. 30 shows typical signaling for the control of a two track drawbridge.

The derails for high speed movements are located about 500 ft. from the draw and those for reverse movements about 300 feet.

It is advisable, at drawbridges, to control the facing point locks and the derails each with a separate lever, as it insures easier and somewhat safer operation.

It is apparent that when the draw is opened the connections which operate the various functions must be disconnected to allow the bridge to swing. This is accomplished by couplers operated by lever 11 which, when reversed, make a through connection from the levers to the functions.

The rail locks, operated by lever 10, are an arrangement which necessitates the rails being in a correct position for a movement over them, before the lever operating the rail locks can be reversed which, indirectly, allows the derails to be closed.

Starting or bridge locking lever 12 is so interlocked with the operating mechanism of the drawbridge that it is impossible to operate the draw until 12 is reversed, and lever 12 cannot be returned to its normal position until the drawbridge is closed. The action of reversing 12 indirectly locks all the derails in their normal positions.

The derail levers 7, 9, 13 and 15 cannot be reversed until 11 is reversed, as lever 11 couples the connections operating the apparatus, as explained. It is apparent that the connections should not be coupled until the rails are locked in the proper position for a movement over them; therefore, 11 reversed locks 10 reversed which, in its turn, locks 12 normal, preventing the opening of the drawbridge. Should a movement be made from signal 2, over the drawbridge, the following procedure would be necessary on the part of the signalman. He would first ascertain that 12 was in the normal position to insure the draw being locked, which would allow him to reverse 10, thereby locking the rails; he could then reverse 11, which would couple the connections and unlock derails 7 and 13, which he could then reverse; next would follow the reversing of 6 to lock 7, 14 to lock 13 and, finally, the clearing of signal 2.

In the figure illustrated, the tower is placed on the drawbridge, although this is not essential as it may be located wherever desired.

Figure 31 shows the signaling required for a four-track layout and also illustrates the method of providing for changes in the track layout after the plant has been installed.

Distant signal 1 is for track 3. It is placed on a bracket pole, owing to there being insufficient clearance between tracks 3 and 4 to locate a straight pole. Distant signal 4 for track 2 is a similar instance.

Home signals 5-6 and 2-3, governing movements on tracks 2 and 3, respectively, are placed directly over the tracks which they govern, on an overhead highway

bridge which is at approximately the right location, although signal 2-3 would be somewhat better located if advanced 250 ft. to the fouling point opposite switch 16 on track 2, as this would permit trains to proceed this much farther before being stopped by this signal. The distance between switches 14 and 23 is great enough to warrant an additional home signal 30 being used to protect switch 14, and a dwarf signal 9 to protect 23.

Signal 34-35 is placed on the left hand side of the track which it governs, owing to there being insufficient room to locate it between tracks 3 and 4. This is also the case with signal 36.

The turnout shown by dotted lines will be installed, it is assumed, shortly after the plant has been placed in service. It is, therefore, advisable to provide in the machine the necessary spare levers to control the switch, derail, facing point locks and signal which will be required when the turnout is installed. It can be readily seen that the spare levers are so arranged in the machine as to maintain a convenient order of the levers for operating purposes when these spare levers are connected to the functions they control and brought into service. When this turnout is installed signal 34-35 will have to be moved to the location shown in dotted lines.

It is necessary to have each of the detector bars controlled by a separate lever, to secure facility of operation by avoiding the locking of certain switches when other switches are being used. For instance, supposing facing point locks 13 and 15 were operated by one lever; then, when a train was making a movement on track 1, both ends of crossover 14 would be locked normal and 16 would be locked in either of its two positions and remain locked until the train moving on track 1 had completely passed over bar 13. By thus preventing the operation of switch 16 it can be readily understood that if the switch was locked in the normal position in the first instance, it would be impossible to reverse it to

allow a movement between tracks 2 and 3 while a movement was being made on track 1.

As 6 is routed over 16 reversed and 34 over 18 reversed, it should be impossible to clear both signals at the same time; therefore, 6 reversed locks 34 normal.

When a train is making a movement from signal 7 over 14 normal, 32 should be locked normal to prevent two conflicting signals being given at the same time; but, if the movement is being made from 7 over 14 reversed, then 32 should not be locked, as it would be possible for a train to proceed from 32 to 30 while the movement was being made over 14 reversed. Therefore, the locking between these two signals reads, "7 reversed when 14 is normal locks 32 normal."

The remainder of the locking for this layout is similar to other locking explained in connection with other layouts.

Fig. 32 shows a somewhat different arrangement of crossovers, used in connection with a four-track layout, to that shown in Fig. 31. It also illustrates the use of signal bridges. At points where these bridges occur, bracket poles could be used to carry the various signals, but signal bridges are indicated to illustrate how they are used, as some railroads prefer them to bracket poles.

Signal bridges are undoubtedly superior to bracket poles as, where they are used, the signals can be located directly above the tracks which they govern. It is frequently essential that bridges be used where it is necessary to span five or more tracks, since it is impossible to locate, between the tracks, straight poles to govern movements on the middle track or tracks.

Advance signals operated by levers 3, 7, 26 and 30 are placed in advance of all switches, etc., located on the tracks which these signals govern and are used to control the movements of trains into the next block section ahead.

It is necessary to place signal 28-27 at the fouling point of track 2 and cross-over 18; a signal bridge, there-

fore, is located at this point, it being also utilized to carry signal 31, which by being so placed is about 180 ft. from the fouling point of track 3 and cross-over 19, where it would be possible to place it.

In addition to the distant signals locking the home signals reversed, they also lock the advance signals reversed. This is illustrated where lever 1 reversed locks 2 and 3 reversed, which follows the general practice of the distant signal controlling all functions located on the track which it governs, so that when the signal is in the "Clear" position a route is set up for a movement through the interlocking.

It is apparent that as signal 6 is for a movement over 14 reversed and signal 25 for a movement over 18 normal or reversed, these signals should not, under any conditions, both be cleared at the same time; therefore, 6 reversed locks 25 normal direct.

It is desirable to make 14 reversed lock 17 normal, as this prevents a movement being made from track 3 to track 2 over 17 reversed, while a train is moving between tracks 1 and 2 over 14 reversed. The locking between levers 19 and 17 is a similar instance.

In Fig. 33 is shown an interlocking plant the functions of which are operated by power. The various types of interlocking machines used with power plants are illustrated in Figs. 19, 20 and 21. When power plants are installed the machine is frequently located in the position shown. A bay window is constructed on the track side of the operating floor of the tower. The signalman, who stands with his back to the track when operating the machine, is thereby enabled to see, clearly, the movements of all trains and to hold communication with maintainers, trainmen, etc., from the front window of the tower without having to pass around the machine.

Detector bar circuits have been substituted for detector bars. These circuits are so arranged that a train passing over a track electrically locks the switches, derails and movable point frogs located in the track over

which the train is running. For instance, when a train makes a movement with traffic on track 1, over 12 normal, immediately the train passes signal 2-3, switch 12 is electrically locked normal and remains so locked until the rear wheels of the last car of the train have passed signal 20. Again, if a movement is being made over 12 reversed and 13 normal from track 1, immediately the train passes signal 2-3, 12 is locked in its reversed position, but 13 remains unlocked until the train is half way over crossover 12, at which point it strikes the track circuit controlling switch 13, thereby locking and holding it in its normal position until the train has passed signal 26-27.

Where power operated distant signals are installed they are generally placed from twenty-five to thirty-five hundred feet from the home signals which they indicate.

As facing point locks are not employed with this layout it is necessary for the levers controlling some of the signals to lock the switch levers in their normal and reverse positions, in place of the facing point lock levers which, had they been used, when reversed, would lock the switch levers in both positions. This is illustrated clearly in the case of signal lever 7 which, when reversed, locks switch lever 13 normal and reversed.

Reference to the locking sheet shows that 14 reversed locks 13 reversed and 15 reversed; therefore, when a train is making a movement over 13 normal on track 2, 14 is locked normal by 13 being normal to prevent the derailment of a train which is making a movement on track 3, over 15, 14 and 13 normal. Movable point frogs controlled by lever 16 is a similar instance.

It is essential for 3 reversed when 13 and 15 are reversed to lock 14 reversed, so as to insure the movable frogs being in their correct position for a movement from signal 3 over 12, 13 and 15 reversed.

Various conditions which occur in locking, differing from those previously illustrated and explained, are shown in Fig. 34.

Reference to Sketch "A" shows that five dwarf signals, controlling movements from track 1 to 5, inclusive, are operated by one lever. The connections which operate these signals are so selected through switches 2, 3, 4 and 5 that it is possible to clear only one of the five signals at one time. For instance, when the switches are set in the correct position for a movement from one of these tracks, then, upon the reversal of lever 1, the signal governing movements from this track is cleared, the other four signals remaining in the stop position. This is illustrated in sketch "A" which shows the switches set in the correct position for a movement from track 5; therefore, when lever 1 is reversed the signal controlling movements from track 5 will be cleared.

As the various signals operated by lever 1 govern movements over switches 2, 3, 4 and 5 in their normal and reversed positions, it is necessary for lever 1 reversed to lock these switches in both their normal and reversed positions. It is apparent, therefore, that if the switches were in the position shown, the reversing of lever 1 would clear the signal governing movements from track 5 and lock switch 5 in the normal position. It would also lock switches 2, 3 and 4 in whichever position they may have been when the lever was reversed.

There are two methods of arranging the locking for signal 6, the first method being shown on the locking sheet and the second method directly beneath it. The first method requires that switches 4, 3 and 2 be locked through a series of specials, whereas, when the second method is employed, these switches are locked direct. It is evident that when the first method is used the switches over which the train is to move are locked when lever 6 is reversed. For instance, if a train is to make a movement from signal 6 to track 5, then switch 5 only would be locked with 6 reversed, thereby allowing the signalman to arrange switches 2, 3 and 4 in their correct position for another movement.

Where the second method is employed the locking is

simplified by eliminating the specials, but the action of reversing lever 6 locks all switches in whatever position they may then be and consequently makes it impossible for the signalman to alter the position of any of the switches while lever 6 is reversed, preparatory to the setting up of another route.

The point in favor of the first method is that the operation of the machine is facilitated to a certain extent, while with the latter arrangement the locking is considerably simplified.

The layout and locking for sketch "B" is illustrated that it may be compared with sketches "C" and "D."

The only locking necessary to explain in connection with sketches "C" and "D" is that occurring between signals 1 and 5 (sketch "C") and between signals 1 and 6 (sketch "D"). In sketch "C" lever 1 should not lock 5 normal, direct, as it is possible to make a movement from signal 1 to signal 2, or from signal 1 over switch 3 reversed at the same time a train is moving from signal 5 over switch 4 reversed; therefore, 1 reversed should lock 5 normal only when 4 is normal. Sketch "D" is similar to sketch "C," with the exception of the addition of dwarf signal 5. This signal makes it possible for a train to move from signal 6 to signal 5 while a movement is being made from signal 1 over 3 reversed and necessitates the following special locking between levers 1 and 6: "1 reversed when 3 and 4 are normal locks 6 normal," it being apparent from the explanation given that if 3 and 4 are reversed, two movements can be made at the same time.

TRANSPOSITION OF SPECIALS.

It is frequently necessary, where a machine is crowded with locking, to transpose some of the specials in order to get additional locking into the space provided. Fig. 35 shows a track layout, beneath which is the special locking occurring on signal 3. The transposition of this special locking is accomplished by the means illustrated.

In sketch "A," this locking (3-reversed when 5 is

normal locks 7-normal) is indicated on a Style "A" dog chart in the regular manner. Reference to this sketch will show that when 7, 5 and 3 are reversed, 5 will be locked in the reversed position; therefore, "3 reversed when 7 is reversed locks 5 reversed," or, "7 reversed when 3 is reversed locks 5 reversed," is the same as "3 reversed when 5 is normal locks 7 normal." These two transposed specials are shown on dog charts in sketches "B" and "C." A comparison of sketches A, B and C and reference to the track layout will make it apparent that the three specials accomplish exactly the same results.

In sketch "B" the special occurs on lever 7 and in sketch "C" it is located on lever 3. A dotted double dog is shown in sketch "B," which illustrates the advantage gained by transposition. This dog represents 6 reversed locking 5 reversed. It can be readily seen that if the locking was placed as shown in sketch "A" with the special on lever 5, it would be impossible to place the dotted double dog between levers 5 and 6.

Sketches "D," "E" and "F" illustrate transposition as it is accomplished in Saxby & Farmer locking.

It is apparent that the locking bar which operates the special dog must be located between the two bars operated by the two other levers; for instance, in sketch "D" driver 5 is located between drivers 3 and 7; therefore, the locking, "3 reversed when 5 is normal locks 7 normal" must be employed. In sketches "E" and "F" the order of the drivers differs from that shown in "D" and, therefore, necessitates the transposing of specials as shown.

Transposition is employed to the best advantage in Saxby & Farmer locking, as in complicated machines it is difficult to so locate the drivers that they will correspond to the order shown on the locking sheet. This is illustrated in sketches "D," "E" and "F," "D" showing the correct order of the drivers for the locking indicated beneath the track layout, and "E" and "F" the incorrect order.

TRANSPOSITION OF SPECIALS.

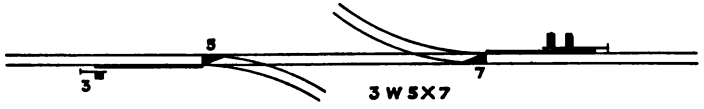

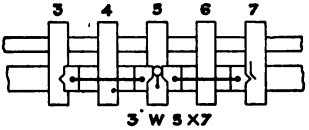

3 W 5 X 7

A

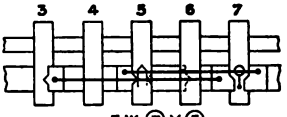

3 W 7 X 5

B

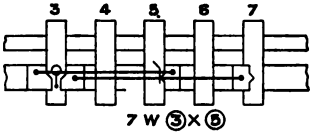

7 W 3 X 5

C

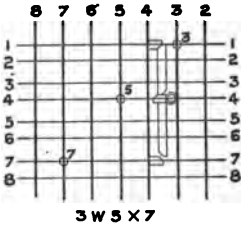

3 W 5 X 7

D

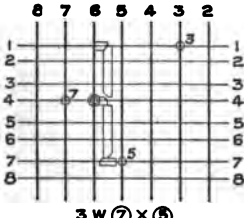

3 W 7 X 5

E

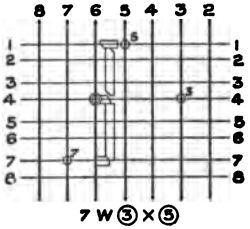

7 W 3 X 5

F

FIG. 35

CHAPTER V.

TESTING INTERLOCKING MACHINES.

A thorough knowledge of how to compile locking sheets is essential to the satisfactory testing of locking in an interlocking machine.

After machines are erected, two methods of testing the locking should be employed. The first method requires a complete test of the locking by the locking sheet and the second a test by the interlocking plan. The former method insures the locking being placed in the machine so that it will correspond to that shown on the dog chart, assuming that the dog chart has been made correctly. If the dog chart is incorrect this method of testing will locate all discrepancies between the locking sheet and the dog chart and will also locate any tight or loose locking which needs to be adjusted. The latter method insures that the locking sheet has been made correctly from the interlocking plan; furthermore, this method takes care, to a certain extent, of all points covered by the former method, but it is desirable to employ both tests, in most instances, in consequence of it being difficult to thoroughly check, by the interlocking plan, the locking for a complicated track layout. The locking sheet test is used to good advantage as it discloses errors in construction which are usually adjusted upon discovery, the machine, therefore, being in good condition when this test is completed for the final test by the interlocking plan.

When testing the machine by the locking sheet for the track plan illustrated in Fig. 36, the following procedure will give good results: First, place the levers in their

normal positions, after which test all levers consecutively, commencing with lever No. 1.

To simplify the following explanations, a Style "A" and a Saxby & Farmer dog chart are illustrated, covering the locking sheet.

Commence testing by trying lever 1. This should be locked normal, as it calls for lever 2 reversed, therefore try to reverse lever 2. This also should be locked as 2 reversed calls for 6 reversed. When 6 is reversed, reverse 2; then reverse 1 and try to throw 2 to the normal position; this should be impossible, as 1 reversed locks 2 reversed. As this completes the test for lever 1, it should be returned to the normal position, 2 and 6 remaining reversed. As 2 reversed locks 6 reversed, 7 and 10 normal, these three levers should be tried to insure them being locked with 2 reversed. Then return 2 to the normal position, reverse 7 and try 2, which should be locked normal by 7 reversed. Next throw 7 to the normal position, reverse 10 and again try 2, which should be locked normal by 10 reversed. This completes the test for lever 2.

Throw all levers to the normal position and try lever 3. This cannot be reversed until 6 is reversed; therefore, reverse 6 and then 3. As 3 reversed locks 6 reversed and 11 normal these two levers should be tried to insure them being locked correctly with 3 reversed. Lever 10 should be tried to see if it can be operated when 3 is reversed, as there should be no lock between 3 and 10 when 7 is normal. Next return 3 to the normal position, reverse 11 and try 3, which should be locked normal by 11 reversed. Then return 11 to the normal position, reverse 7 and 3 and try 10, which should be locked normal. Again return 3 to the normal position, reverse 10 and try 3, which should be locked normal by 10 reversed when 7 is reversed. This completes the test of lever 3.

Return all levers to the normal position. Lever 4 should be free to operate as it is a spare lever.

Reverse 6 and try 7, which should be locked normal by 6 reversed. Throw 6 to the normal position and reverse 7, then 6, and try 7 to see that it is locked reversed by 6 reversed.

Again return all levers to the normal position and operate 7, which should be unlocked, as it only locks levers 2 and 11 normal. The locking between levers 7, 2 and 11 being checked when levers 2 and 11 are tested.

Lever 9 should be free to operate as it is a spare lever.

Try lever 10. This should be locked as it calls for 6 reversed; then reverse lever 6, then 10, and see if 6 is locked reversed by 10 reversed.

Again throw all levers normal and try 11. This should be locked as it calls for 6 reversed. Then reverse 6 and 11 and see if 6 is locked reversed and 7 locked normal by 11 reversed. Next return 11 to the normal position, reverse 7, and try 11 to insure it being locked by 7 reversed. Return 7 to the normal position, reverse 11, then 12, and try 11, which should be locked reversed by 12 reversed.

Return all levers to the normal position and try 12, which should be locked, as 12 reversed calls for 11 reversed.

This completes the testing of the machine by the locking sheet.

When testing a machine from an interlocking plan the usual practice is first to test the switch locking, if any; then the locking used in connection with the facing point locks; then the locking occurring on the signal levers; and, finally, a thorough test should be made which will insure the possibility of setting up any or all routes which do not conflict, and the locking of all routes that do conflict.

Reference to the interlocking plan illustrated in Fig. 36 will show that there is no switch locking to test; therefore, commence testing facing point lock lever 6,

following the same procedure as explained in connection with the locking sheet test. Reverse lever 6 and try switch lever 7; then return 6 to the normal position; reverse 7 and then 6 and see that lever 7 is locked reversed by 6 reversed.

The signals should next be tested. For instance, commence by trying distant signal lever 1 for route from "A" to "D." This should be locked, as it calls for home signal lever 2 to be reversed. Next, try to reverse lever 2. This should also be locked, as 2 reversed calls for facing point lock lever 6 to be reversed; therefore, reverse lever 6, then levers 2 and 1, after which try levers 2, 7, 6 and 10 to see if they are locked in the correct position for a through movement from distant signal 1. Next, return lever 1 to the normal position and again try levers 7, 6 and 10 to insure them being locked correctly for a movement from home signal 2. After this test is complete, return 2 to the normal position and try distant signal lever 1 to insure that distant signal cannot be cleared with home signal 2 normal. This completes the signal test for movements from "A" to "D." All levers should, therefore, be returned to the normal position.

The signal test for movements from "D" to "A" and "D" to "B" will next be considered. Try dwarf signal lever 10. This it should be impossible to reverse, as it calls for facing point lock lever 6 reversed; therefore, reverse 6, then 10, and try levers 6, 7 and 2 to ascertain if they are locked in the proper position for a reverse movement on the main line from dwarf signal 10. Return 10 and 6 to the normal position, then reverse switch lever 7 and again try 10, which should be locked as it calls for lock lever 6 reversed; therefore reverse 6. This will release signal lever 10, which should be reversed and levers 7, 6 and 3 tried to insure them being correctly locked for a movement from "D" to "B." As the movement from "C" to "B" and from "B" to "C" and "B" to "D" exactly correspond to those movements already de-

scribed, it will not be necessary to explain the procedure for a signal test in connection with these movements.

When these tests have been completed, the final tests for routes should be made. For instance, set up two parallel routes from "A" to "D" and from "C" to "B" by reversing levers 6, 2 and 1, and 11 and 12; then return to the normal position levers 11 and 12 and reverse 3, after which return levers 1, 2 and 3 to the normal position and reverse levers 10, 11 and 12. Then return levers 11 and 12 to the normal position and reverse lever 3. This will indicate that there is no conflicting locking in the machine which will prevent two parallel movements being made at the same time. Again return all levers to the normal position and reverse levers 7 and 6 and try home signals 2 and 11, to insure conflicting routes being locked.

This completes the test by the interlocking plan.

When a track layout is complicated, the route test is difficult and requires close attention.

For the purpose of explaining special conditions which occur in testing more complicated interlocking layouts, we will refer to Fig. 37, and commencing with the locking sheet test make such explanations as may differ from those previously described.

When a lever locks two or more levers, as in the case of lever 1 reversed locking levers 2 and 3 reversed, then the following procedure is necessary:

Try lever 1. This will be locked, as it calls for levers 2 and 3 reversed; therefore, reverse lever 20 as 2 reversed locks 20 reversed, then reverse lever 2 and again try lever 1 to insure that it remains locked when lever 3 is normal. Return levers 2 and 20 to the normal position and reverse lever 3, again trying lever 1 to insure it being locked normal when lever 2 is normal. Levers 20, 2 and 1 should then be reversed and when reversed levers 2 and 3 should be tried to ascertain if they are

locked reversed by lever 1 reversed. A condensed idea of the above will be given in connection with the locking on lever 6. As indicated in the locking sheet, lever 6 locks levers 13, 14 and 15 reversed; this lever should therefore be tested by reversing levers 13 and 14 and trying lever 6 to insure correct locking between levers 6 and 15 after which throw lever 13 to the normal position and reverse 15, again trying 6 to insure the locking between levers 6 and 13 being correct. Return 14 to the normal position and reverse 13, trying lever 6 which should be locked, thereby insuring the locking between levers 6 and 14 being correct. Finally reverse levers 14 and 6, trying 13, 14 and 15 to ascertain if they are locked reversed by 6 reversed.

To test the locking occurring on lever 9, proceed as follows: Try lever 9 to insure it being locked with lever 16 in the normal position. Reverse lever 16, then 9 and try levers 16 and 31 to ascertain if they are locked correctly by lever 9 reversed. Return 9 to the normal position and reverse 31, trying 9 to see if it is locked normal by 31 reversed. Return 31 to the normal position and begin testing the specials by reversing 19 and trying 9 to see that it is locked normal by lever 20 being normal with lever 17 normal and 19 reversed. Reverse lever 20 and then lever 9, trying levers 20 and 24 to insure them being correctly locked by lever 9 reversed when 17 is normal and 19 is reversed. Return 9 to the normal position and reverse 24, trying 9 to ascertain if it is correctly locked by 24 reversed when 17 is normal and 19 reversed. As lever 9 reversed should only lock 20 reversed and 24 normal when 17 is normal and 19 reversed, then to make the test of this special complete, two combinations should be tried:

First with levers 17 and 19 normal; then with levers 17 reversed and 19 normal. With the levers 17 and 19 set for each of these two conditions it should be possible to reverse lever 9, at the same time that levers 20 and 24

are in either their normal or reverse positions, thereby indicating that the locking between levers 9, 20 and 24 is only effective when 17 is normal and 19 reversed. The only other combination would be with levers 17 and 19 reversed, but this condition is impossible, as 19 reversed locks 17 normal.

It is advisable to explain the testing of specials used in connection with lever 27 as they differ somewhat from those previously explained. Start this test by trying to reverse lever 27. This will be impossible as 27 reversed calls for 15 reversed; therefore, reverse 15 and again try 27. It should still be impossible to reverse 27 as 27 reversed locks 14 and 13 reversed when 17 is normal. Reverse 14 and again try 27. This should still remain locked as lever 13 is in the normal position; return 14 to the normal position, reverse 13 and try 27, which should still be locked, as lever 14 is in the normal position; therefore, reverse 14 and then 27, trying levers 18, 15, 14 and 13 to ascertain if they are locked correctly by lever 27 reversed. Return 27 to the normal position and reverse 18, trying 27 to see that it is locked normal by 18 reversed. Return 18, 14 and 13 to their normal position and reverse lever 17, again trying lever 27, which should be locked as with 17 reversed 16 should be reversed before 27 can be reversed. Therefore, reverse 16 and then 27, trying 16 to insure it being locked by 27 reversed when 17 is reversed.

In connection with the test of the two specials on lever 27 a test should be made to insure that 14 and 13 are only locked reversed when 17 is normal; in other words, when 17 is reversed there should be no locking between levers 27 and 14 and 13. It is also true that when 17 is normal the locking should not be effective between 27 and 16.

The testing of this interlocking by the track layout will next be considered:

The switch locking occurring between switches 14 and

17 should be tested by reversing lever 14, then trying lever 17 to insure switch 17 being locked in the normal position, thereby preventing a train from moving from signal 9 over switch 17 reversed, when a route is set from signal 6 over switch 14 reversed. Lever 14 should then be returned to the normal position, 17 should be reversed and lever 14 tried to ascertain that switch 14 is locked in the normal position, preventing a movement from signal 6 over switch 14 reversed when a route is set up from signal 9 over switch 17 reversed.

The switch locking between switches 17 and 19 is similar to the above and it therefore will not be explained.

It will be unnecessary to explain the signal test for this layout, as it is similar to that explained in connection with Fig. 36, although somewhat more extensive.

The route test should be conducted as follows: Reverse levers 20, 2 and 1, thereby setting up a route for a direct main line movement on track 4. Reverse levers 13, 5 and 4 to set up a route for through high speed movements on track 1. Reverse levers 15, 28 and 29 and 16, 31 and 32 to set up a route for high speed movements on tracks 2 and 3. Throw all distant and home signal levers to the normal position and reverse dwarf signal levers 24, 25, 8 and 9 to set up routes for reverse movements on all four tracks. Each direct route should also be tried with the reverse parallel routes on the other tracks. For instance, a direct route should be set up on track 4 and reverse parallel route on tracks 1, 2 and 3. This test will indicate that there is no conflicting locking in the machine that will prevent four parallel movements on tracks 1, 2, 3 and 4, being made at the same time. Return all levers to the normal position and reverse switch lever 18 and facing point lock levers 15 and 13. This will set up a route from track 1 to track 2 with the exception of signal 25. Lever 5 should next be tried to insure that a conflicting movement cannot be made over switch 14

normal when switch 18 is reversed. Dwarf signal lever 25 should then be reversed to complete the setting of a route from track 1 to track 2 after which direct and reverse routes should be set up on tracks 3 and 4 to insure that movements can be made on these tracks when a route is set up over switch 18 reversed.

The route over 19 reversed from track 3 to track 4 with signal 9 reversed and the route from track 4 to track 3 with 24 reversed should be set up to insure that movements can be made between tracks 3 and 4 at the same time that a route is set up for movements between tracks 1 and 2 over switch 18 reversed.

Again return all levers to the normal position and set a route for a movement from track 1 over 14 reversed to track 2 the same procedure of test being employed as has been explained in connection with switch 18 reversed. With all levers normal except switch lever 14, lever 25 should be tried to insure that a conflicting route cannot be set from signal 25 over switch 18 normal when switch 14 is reversed.

Return all levers to the normal position and set up a route from track 1 to track 3 over switches 18 and 17 reversed. The only possible movement that could be made with the switches so set would be a direct or reverse movement on track 4. These routes should therefore be set up to insure that such non-conflicting movements can be made with switches 18 and 17 reversed. Conflicting movements should be tried when switches 18 and 17 are reversed; for instance, it should be impossible to get signal 27 or 28 with 18 reversed, and signal 8 or 31 with 17 reversed. Therefore, these should be tried to insure that they are locked in the normal position.

A route from track 1 over switch 14 reversed to track 2 and back, over switch 18 reversed, to track 1, should be set up and all conflicting and non-conflicting routes tried.

In making route tests it is advisable to make a list of all possible movements, setting up each route consecutively and trying, with each, all conflicting routes and the ability to set up all non-conflicting routes.

CHAPTER VI.

INSTALLATION AND MAINTENANCE OF LOCKING.

When installing interlocking machines great care should be taken to insure the machine being level before the necessary parts which contain the locking are fastened to the machine legs. After the frame work and levers of a Style "A" machine have been installed, consisting of the machine legs, top and bottom girders, levers, segments and rockers, it is advisable to bolt and dowel the locking plates to the machine legs, after which the back locking can be placed in the locking plates; then the tappets and tappet jaws may be located, after which the connecting links, then the front locking and finally the locking plate strips may be set in place. When placing the back locking in the locking plates, all the bars for each space should be arranged and put in together; this procedure is also advisable with the front locking.

The machine legs are numbered consecutively from left to right, commencing with number 1, which is located beneath lever 1; then number 2, located between levers 8 and 9, etc. The locking plates are numbered at each end to correspond with the numbers of the machine legs which support them. The tappet jaws and tappets are both numbered to correspond to the levers operating them.

A dog chart (Fig. 38) indicates the method employed to number the back and front locking dogs of a Style "A" machine.

Reference to Fig. 9 shows that three locking bars can be used in each back locking space, and five locking bars

in each front locking space. The bars in the back space are designated as top (T), middle (M) and bottom (B); and those in the front space as top (T), top (T), middle (M), bottom (B), bottom (B). Although the two top bars and the two bottom bars are designated by the same letters, T and B, respectively, this need not cause confusion, as the drilling of the dog indicates to which top or bottom bar it is attached. When numbering a dog, its position in relation to the tappets must first be defined, then the bar which it operates and finally the space in which it is located. For instance, in the figure is shown a dog in the first space, operated by tappet 1, the locking bar which it operates being attached to the middle of the dog; this dog, therefore, would be numbered 1-M-1, the first number corresponding to the tappet which operates it, the letter "M" indicating that the dog is attached to the middle bar and the last number showing in which space the dog is located. The system of numbering is the same for both front and back locking, the width of the dogs indicating whether they are to be used in the front or back spaces in the locking plate.

The No. 8 special swing dogs, the tappet pieces, the front locking guides and the locking strips are not numbered, as they are interchangeable; in addition to which the special swing dogs and tappet pieces are generally shipped attached to the tappets. In many instances the special studs upon which the special dogs swing are riveted to the tappets to prevent the studs from loosening and thus causing trouble with the locking.

The front locking guides are shipped attached to the locking plates as, although these are interchangeable, it is advisable to have them located in the position where placed when the machine is constructed, as they are fitted at that time to guide the tappets at the points where they are installed.

The front and back locking dogs and bars are shipped assembled, except where two bars are attached to a coup-

FIG. 38

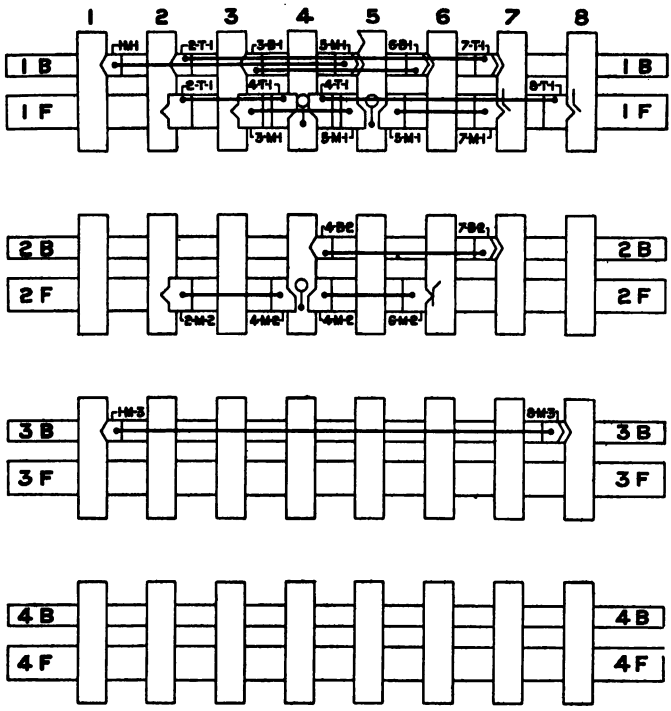

LOCATION NUMBERS
FOR
STYLE "A" MACHINE LOCKING PARTS

FIG. 39

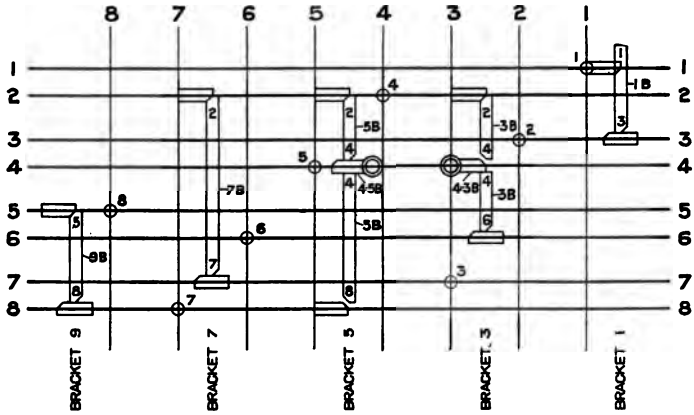

LOCATION NUMBERS
FOR
S.& F. MACHINE LOCKING PARTS

ling dog, it being advisable, in this instance, to uncouple the bars, to avoid breaking at the joint.

After the frame and levers of a Saxby & Farmer machine have been erected and lined up, the locking bearings should be attached to the machine legs; then the front and back rails can be fastened to the locking bearings; the locking shafts should next be placed in these bearings, after which the front rail caps should be bolted to the front rail; the locking brackets can then be bolted to the rails and the longitudinal bars placed in these brackets, after which the special swing dogs and cross locks may be located, and finally the locking bracket caps bolted to the locking brackets. The two longitudinal bars for each space should be arranged and placed in the locking brackets together.

The locking bearings are numbered consecutively from right to left (looking from the back of the machine) commencing with number 1, which is located in the vicinity of lever 1. The back and front rails are numbered at each end to correspond with the numbers of the locking bearings upon which they rest. The locking brackets are numbered as shown in Fig. 39, the use of brackets 2, 4, 6 and 8 having been unnecessary. A locking shaft is numbered on its end to correspond to the number of the lever operating it. The longitudinal bars are numbered consecutively, commencing with number 1, as shown in the figure, the numbers being stamped on each end of the bars. The locking bracket caps are not numbered, as they are interchangeable.

The cross locking is marked as indicated in Fig. 39; for instance, in bracket 3 the cross locks are marked, "3 B" to indicate the locking bracket in which they are located. They are also numbered to correspond to the bars between which they extend, as in the case of the cross-locking in bracket 7, which extends from bar 2 to bar 7 and, therefore, is numbered 2 and 7, these numbers being placed at the opposite ends of the cross-lock.

The special swing dogs are marked to indicate on which bar and in which bracket they are located; for instance, in bracket 5 the special swing dog is marked, "4-5 B," the 4 representing the longitudinal bar on which the swing dog is pivoted, and the 5 B the bracket in which it is located.

The locking dogs and trunnions are not numbered, as they are riveted to the longitudinal bars.

After machines have been erected and disassembled for shipment, it is the custom to ship locking shafts with locking bar drivers and cranks assembled; it is, therefore, unnecessary to number locking bar drivers and cranks.

Where Style "A" machines are installed, it is advisable to have a window in one end of the tower, opposite the locking plate, through which a repairman may slide a back locking bar out of the locking plates without being obliged to remove the front locking and tappets, located in front of it.

When it is necessary to make changes in the locking of a Style "A" machine, a form constructed from a locking plate, in which to make new locking, will give good satisfaction. To make a locking form, a locking plate is cut in two, lengthwise. These parts are placed end to end and lagged to a 4″ x 8″ plank, the two ends being joined by locking guides.

It is advisable for each interlocking foreman to have a set of jigs and a small drill press. The jigs can be purchased from the various manufacturers of signal apparatus. If jigs are unobtainable when a change in locking is necessary, the locking bars may be spotted for drilling by using drilled locking dogs.

If when new or reconstructed locking is placed in a Style "A" machine the levers are difficult to operate, in consequence of the locking being too tight, the notches in the tappets may be filed about five thousandths of an inch. If the locking requires more filing than this to loosen it sufficiently to secure easy operation, then a new

locking bar should be substituted. It is not desirable to file the noses of the locking dogs except in extreme cases.

When a change is being made in the locking of a Style "A" machine, it is sometimes necessary to plug a notch in a tappet. This is accomplished by cutting the nose off a No. 16 dog and using it as a plug, it being secured to the tappet by a rivet, the tappet and plug being drilled countersunk for the purpose. It is also desirable to construct, as far as possible, all the locking necessary for a change, before the locking in the machine is disturbed. Then as small a quantity of locking as possible should be taken out of the machine at one time, in order to avoid, as much as possible, errors by the signalman. Changes should be made when traffic is light and, to insure further protection, the latch handles of the distant signal levers should be disconnected by removing the pins connecting them to the latch rod, thereby preventing the clearing of any distant signal and, consequently, bringing all trains into the limits of the interlocking under control. It is desirable to place with the signalman a man familiar with the necessary locking changes, in order to check the operating of the machine. Wherever feasible the locking changes, when once commenced, should be carried to completion without stop.

Machines should be thoroughly overhauled once a week and all loose bolts tightened, as the easy operation of the locking depends, considerably, upon the machine being rigid and lined up correctly. The necessary quantity of repair material to be kept on hand is governed by local conditions. A quantity sufficient for ordinary changes and repairs should be provided. As the majority of locking parts are interchangeable, material that has been used should be kept for future changes; it also can be used in cases of emergency, for temporary work.

A heavy canvas placed over Saxby & Farmer locking will keep it in good condition.

Black lead dust is a very good, although somewhat expensive, lubricant. It should be applied to the locking once every two weeks, by means of a soft brush. The locking should be thoroughly cleaned before each application of black lead, this being accomplished by the use of a stiff brush and a bellows. If oil is used in preference to black lead, a good grade of lard oil will prove satisfactory, applications of which should be made every two weeks, the locking being thoroughly cleaned before applying a fresh coat of oil. As little oil as possible should be applied, as it tends to harden on the locking and, in consequence, makes difficult the operation of the machine.

CHAPTER VII.

TOWER DIAGRAMS AND MANIPULATION CHARTS.

For the instruction of signalmen it is the practice to place in each interlocking tower a track diagram and a manipulation chart, the former illustrating the location of all tracks and signals and the latter indicating in which position the levers are to be placed in order to set up a given route.

Where there are only a few tracks interlocked, as shown in Fig. 40, the tower diagram and manipulation chart are placed on one drawing which is about 18″ wide x 36″ long, this size being necessary that the letters and figures may be sufficiently large to enable a signalman to see them from any point of the operating side of the machine, the diagram and chart being hung so that they face the signalman when he is operating.

As the methods of arranging and wording manipulation charts covering a given layout differ considerably, a standard method is explained.

When proceeding to lay out a manipulation chart a satisfactory method is to first lay out all possible movements in one direction, indicating opposite each movement the necessary levers to reverse to set up the route for this movement. For instance, the first route indicated under the head of "North Bound" is "On N. B. Main Direct," which requires the reversing of facing point lock 8, to lock switches 7 and 9 normal, then home signal 2, to lock facing point lock 8 reversed and, finally, distant signal 1 to lock home signal 2 reversed.

The second route is "From N. B. Main to Siding"; this requires switch and derail 9, facing point locks 8

and 10 and home signal 3, the levers being placed in the order indicated as it is necessary to reverse switch and derail 9 before locking them with facing point locks 8 and 10, after which signal 3 is cleared, which action locks the preceding levers and gives a clear route from the main to the siding.

The third route is "On S. B. Main Reverse," which requires facing point lock 6 to lock switch 7 normal, after which dwarf signal 4 may be cleared.

The fourth movement is "From S. B. Main to N. B. Main," which necessitates first the reversing of switches 7, then facing point lock 8 to lock switch 9 normal and the north end of crossover 7 reversed; next facing point lock 6 is reversed to lock the south end of crossover 7, after which dwarf signal 4 may be cleared.

The fifth movement is "From S. B. Main to Siding," the switch and derail 9 being first reversed, then facing point lock 10, to lock derail 9; next switches 7 are reversed and facing point locks 8 and 6 to lock both ends of crossover 7, after which dwarf signal 4 may be cleared.

The south bound movements can be followed from the foregoing explanations.

The important points to consider when laying out manipulation charts are first to secure a correct order of the levers, so that they may be reversed in the order shown on the chart, and then to so arrange them that a convenient order for operation will be secured. For instance, in the last movement under the heading of "North Bound," it would have been possible to arrange the levers in either of the following ways: 7, 6, 9, 10, 8 and 4, or 7, 9, 6, 8, 10 and 4, neither of which is as satisfactory as the order shown. This point is of little consequence in small machines, but should be taken into consideration when large manipulation charts are made.

TOWER DIAGRAM
AND MANIPULATION CHART
FIG. 40

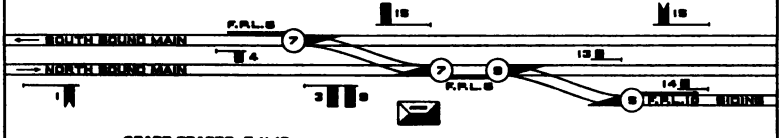

SPARE SPACES: 5, 11, 12

NORTH BOUND	Reverse Levers					
ON N.B. MAIN DIRECT	8	2	1			
FROM N.B. " TO SIDING	9	10	8	3		
ON S.B. " REVERSE	6	4				
FROM S.B. " TO N.B. MAIN	7	8	5	4		
" S.B. " " SIDING	9	10	7	8	6	4

SOUTH BOUND	Reverse Levers					
ON S.B. MAIN DIRECT	8	15	16			
" N.B. " REVERSE	9	13				
FROM N.B. " TO S.B. MAIN	7	8	9	13		
" SIDING TO N.B. MAIN	5	6	10	14		
" SIDING " S.B. "	7	8	6	10	14	

INDEX.

Advance signals 57
Arrangement of levers in interlocking machines.....7, 38
Bars, Crossing 35, 45
Bars, Detector 4, 34, 35
Bracket signals 36, 52, 55
Bridge signals 55, 57
Cabin, Signal 7
Charts, Dog 14, 24, 35, 40, 44, 50
Charts, Manipulation 79
Circuits, Detector 58
Crossing bars 35, 45
Derails 35, 36, 45, 47, 48, 54
Detector bars 4, 34, 35
Detector circuits 58
Diagrams, Tower 79
Distant signals 36
Distant signals, power operated..... 59
Dog charts 14, 24, 35, 40, 44, 50
Double slips 35
Dwarf interlocking machine..... 32
Dwarf interlocking machine, style "D"..... 32
Dwarf signals 36
Dwarf signals, selected 60
Electric interlocking machines.....32, 33
Electro-pneumatic interlocking machine..... 32
Facing-point lock 37
Home signals 36
Horizontal locking 8
Installation of locking 73
Interlocking machines 2, 6
Interlocking machines, arrangement of levers in.....7, 38
Interlocking machines, dwarf..... 32
" " dwarf, style "D"..... 32
" " electric 32, 33
" " electro-pneumatic 32
" " Johnson 30
" " National 30
" " Saxby & Farmer, horizontal lead-out, 31
" " " " locking details.... 15
" " " " locking dogs..... 15
" " " " parts of..... 8
" " location numbers for parts of..... 75

Interlocking machines, Saxby & Farmer, special locking.... 17
" " " " throw of locking.. 18
" " " " vertical lead-out.7, 9
" " Stevens 32
" " Style "A" 7
" " " locking details..... 22
" " " locking dogs..... 22
" " " parts of 12
" " " location numbers for parts of..... 73
" " " special locking..... 27
" " " throw of locking..... 26
" " Style "C"..... 31
" " testing 63
" " testing by interlocking plans..... 63
" " testing by locking sheets..... 63
Interlocking plans 36, 42, 45, 47, 48, 52, 54, 55, 57, 58, 59
" plans, numbering functions on.....38, 42
" plans, testing interlocking machines by..... 63
Introductory 1
Johnson interlocking machine 30
Location numbers for Saxby & Farmer interlocking machine parts 75
Location numbers for Saxby & Farmer locking..... 75
" " for Style "A" interlocking machine parts.. 73
" " for Style "A" locking..... 73
Locking 5, 34
" horizontal 8
" installation of 73
" location numbers for Saxby & Farmer..... 75
" location numbers for Style "A"..... 73
" maintenance of 73
" preliminary latch 11
" Saxby & Farmer 10
" sheets 21, 35, 38, 40, 43, 46, 48, 52, 54, 57, 58, 59
" Style "A" 14
" switch 48, 49
" testing 63
" testing by interlocking plan 63
" testing by locking sheet 63
" transposition of specials 61
" vertical 12
Maintenance of locking 73
Manipulation charts 79
Movable-point-frogs 36
National interlocking machine..... 30
Numbering functions on interlocking plans.. .....38, 42
Preliminary latch locking 11
Routing of signals 36, 38, 42, 53

Saxby & Farmer interlocking machine, horizontal lead-out.. 31
" " " " locking details..... 15
" " " " locking dogs 15
" " " " parts of 8
" " " " parts of location numbers for parts of..... 75
Saxby & Farmer interlocking machine, special locking..... 17
" " " " throw for locking... 18
" " " " vertical lead-out...7, 9
" " locking 10
Selected dwarf signals..... 60
Sheets, Locking 21, 35, 38, 40, 43, 46, 48, 52, 54, 57, 58, 59
Signal cabins 7
Signal towers 7
Signaled track lay-outs..34, 36, 42, 45, 47, 48, 52, 54, 55, 57, 58, 59
Signals, advance 57
" bracket 36, 52, 55
" bridge 55, 57
" distant 36
" distart, power operated 59
" dwarf 36
" dwarf, selected 60
" home 36
" routing of 36, 38, 42, 53
Specials, Transportation of 61
Stevens interlocking machine..... 32
Style "A" interlocking machine..... 7
" " " locking details 22
" " " locking dogs 22
" " " parts of 12
" " " location numbers for parts of 73
" " " special locking 27
" " " throw of locking..... 26
" locking 14
Style "C" interlocking machine..... 31
Switch and lock movement..... 37
Switches 35
Switch locking 48, 49
Symbols 35
Testing interlocking machines 63
Testing interlocking machines by interlocking plans..... 63
Testing interlocking machines by locking sheets..... 63
Tower diagrams 79
Towers, Signal 7
Track changes 56
Track lay-outs, signaled..34, 36, 42, 45, 47, 48, 52, 54, 55, 57, 58, 59
Transposition of specials 61
Vertical locking 12

89090510678

b89090510678a